COSEL

Power Factor Correction | World wide | Cost Effective | Rugged PCB type | Safety Approvals | EMI | Inrush current limiting | OCP | OVP

LFA-series

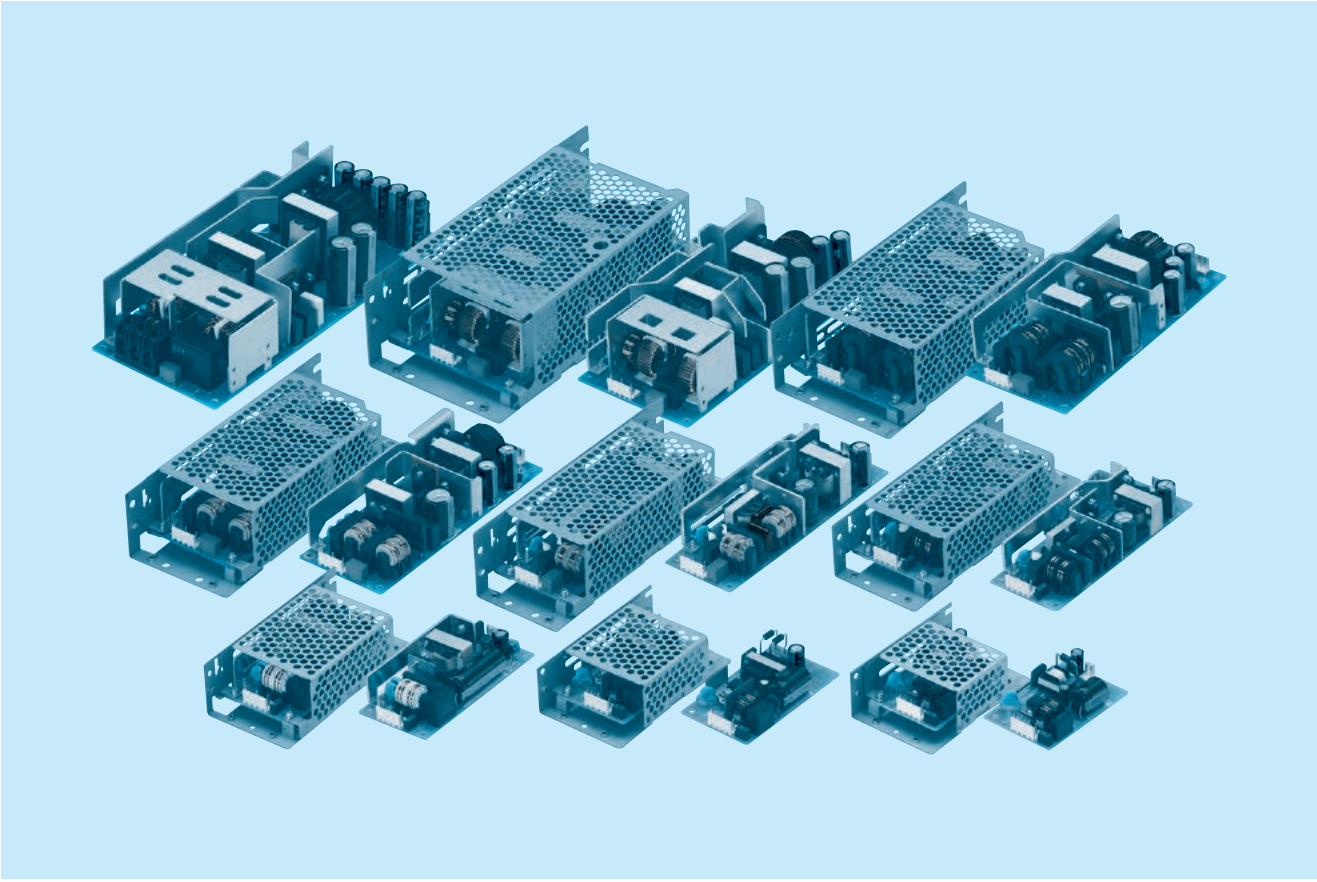

Feature

Small and compact PCB construction
Built-in inrush current, overcurrent and overvoltage protection circuits
Harmonic attenuator (Complies with IEC61000-3-2)
Universal input (AC85-264V)
Power factor correction (LFA50F-300F)
Built-in reducing standby power circuit (LFA10F, 15F)

Safety agency approvals

UL60950-1, C-UL(CSA60950-1), EN62368-1
Complies with DEN-AN

EMI

Complies with FCC-B, CISPR22-B, EN55011-B, EN55022-B, VCCI-B

5-year warranty (refer to Instruction Manual)

CE marking

Low Voltage Directive
RoHS Directive

UKCA marking

Electrical Equipment Safety Regulations
RoHS Regulations

EMS Compliance : EN61204-3, EN61000-6-2

EN61000-4-2
EN61000-4-3
EN61000-4-4
EN61000-4-5
EN61000-4-6
EN61000-4-8
EN61000-4-11

COSEL AC-DC Power Supplies Open Frame/ Enclosed Type

LFA10F

Ordering information

LF	A	10	F	-□	-□
①	②	③	④	⑤	⑥

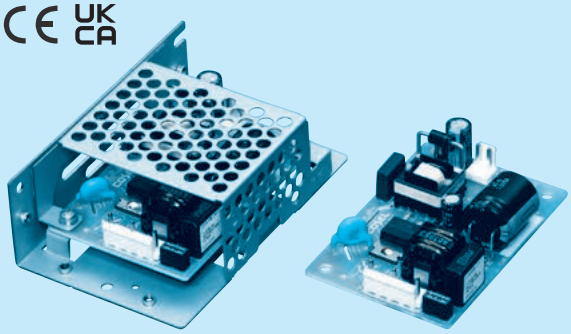

Example recommended EMI/EMC filter
NAC-04-472

High voltage pulse noise type : NAP series
Low leakage current type : NAM series

＊A higher current rating EMI/EMC filter may be recommended in view of the other devices that could be connected in parallel with the power supply.

①Series name
②Single output
③Output wattage
④Universal input
⑤Output voltage
⑥Optional
C : with Coating
G : Low leakage current
J1 : VH(J.S.T.)connector type
S : with Chassis
SN: with Chassis & cover
Y : with Potentiometer

Specification is changed at option, refer to Instruction Manual.

This power supply is manufactured by SMD technology. The stress to P.C.B like twisting or bending causes the defect of the unit, so handle the unit with care.
＊Make sure necessary tests will be carried out on your end equipment with the power supply installed in accordance with any required EMC/EMI regulations.

MODEL	LFA10F-3R3-Y	LFA10F-5	LFA10F-12	LFA10F-15	LFA10F-24
MAX OUTPUT WATTAGE[W]	6.6	10	10.8	10.5	12
DC OUTPUT	3.3V 2A	5V 2A	12V 0.9A	15V 0.7A	24V 0.5A

SPECIFICATIONS

	MODEL		LFA10F-3R3-Y	LFA10F-5	LFA10F-12	LFA10F-15	LFA10F-24
INPUT	VOLTAGE[V]		AC85 - 264 1φ (Refer to "Derating", Instruction Manual 1 and 3) ＊3				
	CURRENT[A]	ACIN 100V	0.18typ (Io=100%)	0.26typ (Io=100%)			
		ACIN 200V	0.11typ (Io=100%)	0.16typ (Io=100%)			
	FREQUENCY[Hz]		50 / 60 (47 - 440)				
	EFFICIENCY[%]	ACIN 100V	68.0typ	74.0typ	76.5typ	77.5typ	79.5typ
		ACIN 200V	68.5typ	76.0typ	79.0typ	80.0typ	83.0typ
	INRUSH CURRENT[A]	ACIN 100V	15typ (Io=100%)				
		ACIN 200V	30typ (Io=100%)				
	LEAKAGE CURRENT[mA]		0.15/0.30max (ACIN 100V / 240V 60Hz, Io=100%, According to IEC62368-1 and DEN-AN)				
OUTPUT	VOLTAGE[V]		3.3	5	12	15	24
	CURRENT[A]		2.0	2.0	0.9	0.7	0.5
	LINE REGULATION[mV] ＊5		20max	20max	48max	60max	96max
	LOAD REGULATION[mV] ＊5		40max	40max	100max	120max	150max
	RIPPLE[mVp-p] ＊1	0 to +50℃	80max	80max	120max	120max	120max
		-10 - 0℃	140max	140max	160max	160max	160max
		Io=0 - 35%	190max	160max	240max	240max	280max
	RIPPLE NOISE[mVp-p] ＊1	0 to +50℃	120max	120max	150max	150max	150max
		-10 - 0℃	160max	160max	180max	180max	180max
		Io=0 - 35%	240max	240max	300max	300max	320max
	TEMPERATURE REGULATION[mV]	0 to +50℃	50max	50max	120max	150max	240max
		-10 to +50℃	60max	60max	150max	180max	290max
	DRIFT[mV] ＊2		20max	20max	48max	60max	96max
	START-UP TIME[ms]		200typ (ACIN 100V, Io=100%) ＊Start-up time is 700ms typ for less than 1minute of applying input again from turning off the input voltage.				
	HOLD-UP TIME[ms]		20typ (ACIN 100V, Io=100%)				
	OUTPUT VOLTAGE ADJUSTMENT RANGE[V]		2.85 to 3.63	Fixed ("Y"option is available for adjusting output voltage between ±10%)			
	OUTPUT VOLTAGE SETTING[V]		3.30 to 3.40	4.90 to 5.30	11.50 to 12.50	14.40 to 15.60	23.00 to 25.00
PROTECTION CIRCUIT AND OTHERS	OVERCURRENT PROTECTION		Works over 105% of rating and recovers automatically				
	OVERVOLTAGE PROTECTION		4.00 to 5.25	5.75 to 7.00	13.80 to 16.80	17.25 to 21.00	27.60 to 33.60
	OPERATING INDICATION		Not provided				
	REMOTE SENSING		Not provided				
	REMOTE ON/OFF		Not provided				
ISOLATION	INPUT-OUTPUT		AC3,000V 1minute, Cutoff current = 10mA, DC500V 50MΩ min (At Room Temperature)				
	INPUT-FG		AC2,000V 1minute, Cutoff current = 10mA, DC500V 50MΩ min (At Room Temperature)				
	OUTPUT-FG		AC500V 1minute, Cutoff current = 25mA, DC500V 50MΩ min (At Room Temperature)				
ENVIRONMENT	OPERATING TEMP.,HUMID.AND ALTITUDE		-10 to +70℃, 20 - 90%RH (Non condensing) (Refer to "Derating", Instruction Manual 3), 3,000m (10,000 feet) max ＊3				
	STORAGE TEMP.,HUMID.AND ALTITUDE		-20 to +75℃, 20 - 90%RH (Non condensing), 9,000m (30,000 feet) max				
	VIBRATION		10 - 55Hz, 19.6m/s² (2G), 3minutes period, 60minutes each along X, Y and Z axis				
	IMPACT		196.1m/s² (20G), 11ms, once each X, Y and Z axis				
SAFETY AND NOISE REGULATIONS	AGENCY APPROVALS		UL60950-1, C-UL (CSA60950-1), EN62368-1 Complies with DEN-AN				
	CONDUCTED NOISE		Complies with FCC-B, VCCI-B, CISPR-B, EN55011-B, EN55022-B				
	HARMONIC ATTENUATOR		Complies with IEC61000-3-2 (Class A) ＊6 (Not built-in to active filter) ＊4				
OTHERS	CASE SIZE/WEIGHT		50×22×73.5mm [1.97×0.87×2.89 inches] (W×H×D) / 55g max (with chassis & cover : 150g max)				
	COOLING METHOD		Convection (Refer to "Derating", Instruction Manual 3) ＊3				

＊1 This is the value that measured on measuring board with capacitor of 22μF at 150mm from output terminal. Measured by 20MHz oscilloscope or Ripple-Noise meter (Equivalent to KEISOKU-GIKEN: RM103). A circuit reducing standby power is built in this unit. Therefore, the internal switch element is intermittent operated, and the Ripple/Ripple Noise specification in load factor Io=0-35% is different. Please refer to the Instruction Manual 1.7.
＊2 Drift is the change in DC output for an eight hour period after a half-hour warm-up at 25℃, with the input voltage held constant at the rated input/output.
＊3 Derating is required.
＊4 When two or more units are operating it may not comply with the IEC61000-3-2. Please contact us for details.
＊5 Please contact us about dynamic load and input response.
＊6 Please contact us about another class.
＊ To meet the specifications. Do not operate over-loaded condition.
＊ Parallel operation is not possible.
＊ Derating is required when operated with chassis and cover.
＊ Sound noise may be generated by power supply in case of pulse load.

February 06, 2026

Block diagram

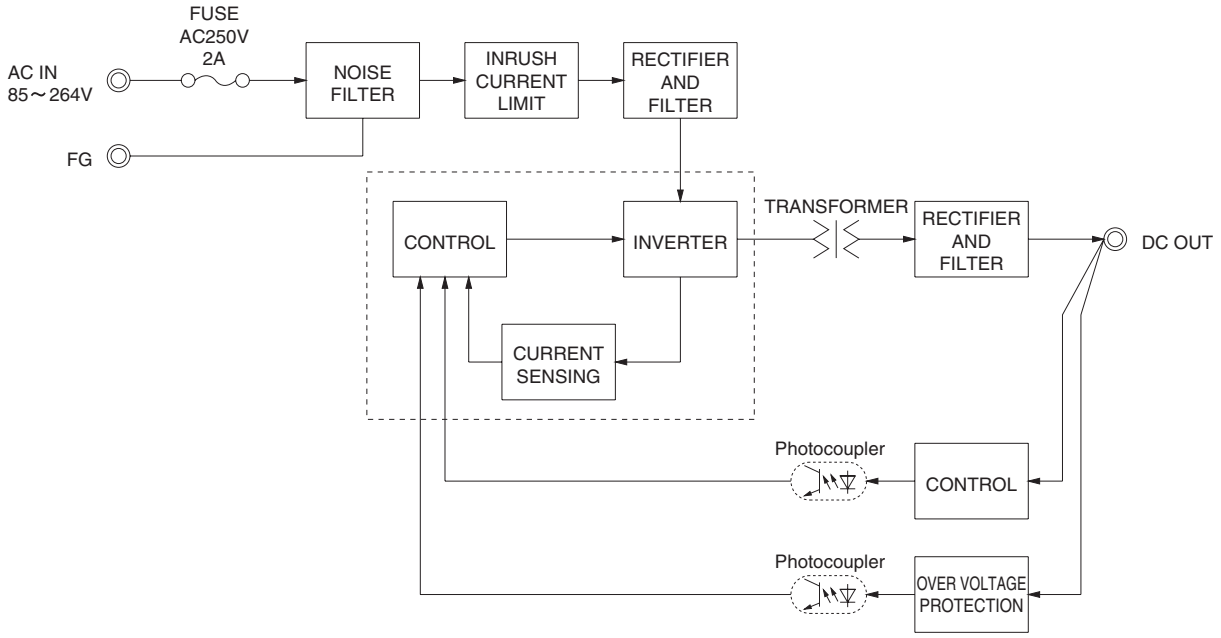

External view

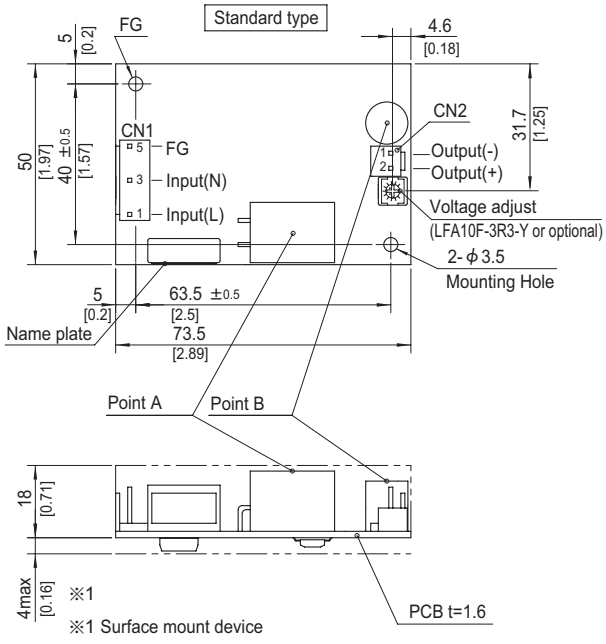

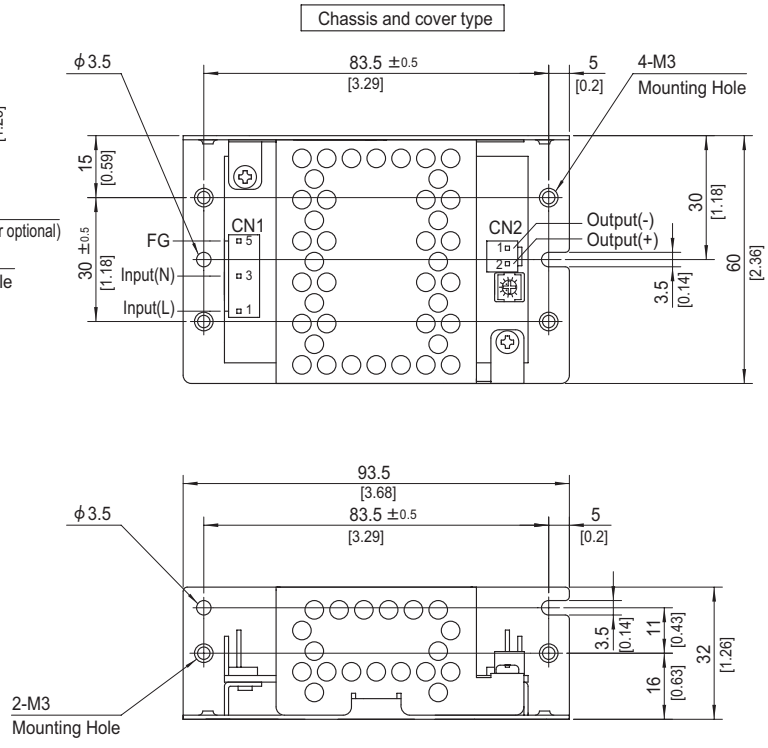

※ The back side of P.C.B. of the power supply is assembled some SMDs.
Be attention not to bump against the attached area by vibration.
※ Use the spacer of 8mm length or more regarding insulation.
And do not use press-fitting bush.
※ Point A, Point B are thermometry points. Please refer to Instruction Manual 3.

I/O Connector		Mating connector	Terminal	
CN1	1-1123724-3	1-1123722-5	Chain	1123721-1
			Loose	1318912-1
CN2	1-1123723-2	1-1123722-2	Chain	1123721-1
			Loose	1318912-1

(Mfr:Tyco Electronics)

※ I/O Connector is Mfr. Tyco Electronics
※ Option:-J1:(J.S.T) connector type. Refer to Instruction Manual 6.

<PIN CONNECTION>

CN1

Pin No.	Input
1	AC(L)
2	
3	AC(N)
4	
5	FG

CN2

Pin No.	Output
1	-V
2	+V

※ Tolerance : ±1 [±0.04]
※ Weight : 55g max (with chassis & cover : 150g max)
※ PCB material / thickness : CEM3 / 1.6mm
※ Optional chassis and cover material : Electric galvanizing steel board.
※ Dimensions in mm, [ ]=inches
※ Mounting torque (Mounting hole of chassis) : 0.6N・m (6.3kgf・cm) max

COSEL AC-DC Power Supplies Open Frame/ Enclosed Type

LFA15F

Ordering information

LF	A	15	F	-□	-□
①	②	③	④	⑤	⑥

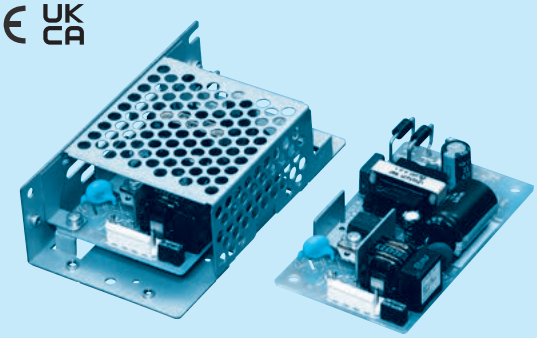

Example recommended EMI/EMC filter
NAC-04-472

High voltage pulse noise type : NAP series
Low leakage current type : NAM series

＊A higher current rating EMI/EMC filter may be recommended in view of the other devices that could be connected in parallel with the power supply.

①Series name
②Single output
③Output wattage
④Universal input
⑤Output voltage
⑥Optional
C : with Coating
G : Low leakage current
J1 : VH(J.S.T.)connector type
S : with Chassis
SN: with Chassis & cover
Y : with Potentiometer

Specification is changed at option, refer to Instruction Manual.

This power supply is manufactured by SMD technology. The stress to P.C.B like twisting or bending causes the defect of the unit, so handle the unit with care.
＊Make sure necessary tests will be carried out on your end equipment with the power supply installed in accordance with any required EMC/EMI regulations.

MODEL	LFA15F-3R3-Y	LFA15F-5	LFA15F-12	LFA15F-15	LFA15F-24
MAX OUTPUT WATTAGE[W]	9.9	15	15.6	15	16.8
DC OUTPUT	3.3V 3A	5V 3A	12V 1.3A	15V 1A	24V 0.7A

SPECIFICATIONS

	MODEL		LFA15F-3R3-Y	LFA15F-5	LFA15F-12	LFA15F-15	LFA15F-24
INPUT	VOLTAGE[V]		AC85 - 264 1φ (Refer to "Derating", Instruction Manual 1 and 3) ＊3				
	CURRENT[A]	ACIN 100V	0.24typ (Io=100%)	0.35typ (Io=100%)			
		ACIN 200V	0.15typ (Io=100%)	0.20typ (Io=100%)			
	FREQUENCY[Hz]		50 / 60 (47 - 440)				
	EFFICIENCY[%]	ACIN 100V	68.0typ	73.0typ	76.0typ	77.0typ	78.0typ
		ACIN 200V	69.0typ	76.0typ	78.5typ	80.0typ	81.5typ
	INRUSH CURRENT[A]	ACIN 100V	15typ (Io=100%) (At cold start) (Ta=25℃)				
		ACIN 200V	30typ (Io=100%) (At cold start) (Ta=25℃)				
	LEAKAGE CURRENT[mA]		0.15/0.30max (ACIN 100V / 240V 60Hz, Io=100%, According to IEC62368-1 and DEN-AN)				
OUTPUT	VOLTAGE[V]		3.3	5	12	15	24
	CURRENT[A]		3.0	3.0	1.3	1.0	0.7
	LINE REGULATION[mV] ＊5		20max	20max	48max	60max	96max
	LOAD REGULATION[mV] ＊5		40max	40max	100max	120max	150max
	RIPPLE[mVp-p] ＊1	0 to +50℃	80max	80max	120max	120max	120max
		-10 - 0℃	140max	140max	160max	160max	160max
		Io=0 - 35%	190max	160max	240max	240max	280max
	RIPPLE NOISE[mVp-p] ＊1	0 to +50℃	120max	120max	150max	150max	150max
		-10 - 0℃	160max	160max	180max	180max	180max
		Io=0 - 35%	240max	240max	300max	300max	320max
	TEMPERATURE REGULATION[mV]	0 to +50℃	50max	50max	120max	150max	240max
		-10 to +50℃	60max	60max	150max	180max	290max
	DRIFT[mV] ＊2		20max	20max	48max	60max	96max
	START-UP TIME[ms]		200typ (ACIN 100V, Io=100%) ＊Start-up time is 700ms typ for less than 1minute of applying input again from turning off the input voltage.				
	HOLD-UP TIME[ms]		20typ (ACIN 100V, Io=100%)				
	OUTPUT VOLTAGE ADJUSTMENT RANGE[V]		2.85 to 3.63	Fixed ("Y"option is available for adjusting output voltage between ±10%)			
	OUTPUT VOLTAGE SETTING[V]		3.30 to 3.40	4.90 to 5.30	11.50 to 12.50	14.40 to 15.60	23.00 to 25.00
PROTECTION CIRCUIT AND OTHERS	OVERCURRENT PROTECTION		Works over 105% of rating and recovers automatically				
	OVERVOLTAGE PROTECTION		4.00 to 5.25	5.75 to 7.00	13.80 to 16.80	17.25 to 21.00	27.60 to 33.60
	OPERATING INDICATION		Not provided				
	REMOTE SENSING		Not provided				
	REMOTE ON/OFF		Not provided				
ISOLATION	INPUT-OUTPUT		AC3,000V 1minute, Cutoff current = 10mA, DC500V 50MΩ min (At Room Temperature)				
	INPUT-FG		AC2,000V 1minute, Cutoff current = 10mA, DC500V 50MΩ min (At Room Temperature)				
	OUTPUT-FG		AC500V 1minute, Cutoff current = 25mA, DC500V 50MΩ min (At Room Temperature)				
ENVIRONMENT	OPERATING TEMP.,HUMID.AND ALTITUDE		-10 to +70℃, 20 - 90%RH (Non condensing) (Refer to "Derating", Instruction Manual 3), 3,000m (10,000 feet) max ＊3				
	STORAGE TEMP.,HUMID.AND ALTITUDE		-20 to +75℃, 20 - 90%RH (Non condensing), 9,000m (30,000 feet) max				
	VIBRATION		10 - 55Hz, 19.6m/s² (2G), 3minutes period, 60minutes each along X, Y and Z axis				
	IMPACT		196.1m/s² (20G), 11ms, once each X, Y and Z axis				
SAFETY AND NOISE REGULATIONS	AGENCY APPROVALS		UL60950-1, C-UL (CSA60950-1), EN62368-1 Complies with DEN-AN				
	CONDUCTED NOISE		Complies with FCC-B, VCCI-B, CISPR-B, EN55011-B, EN55022-B				
	HARMONIC ATTENUATOR		Complies with IEC61000-3-2 (Class A) ＊6 (Not built-in to active filter) ＊4				
OTHERS	CASE SIZE/WEIGHT		50×22×87.5mm [1.97×0.87×3.44 inches] (W×H×D) / 80g max (with chassis & cover : 190g max)				
	COOLING METHOD		Convection (Refer to "Derating", Instruction Manual 3) ＊3				

＊1 This is the value that measured on measuring board with capacitor of 22μF at 150mm from output terminal. Measured by 20MHz oscilloscope or Ripple-Noise meter (Equivalent to KEISOKU-GIKEN: RM103). A circuit reducing standby power is built in this unit. Therefore, the internal switch element is intermittent operated, and the Ripple/Ripple Noise specification in load factor Io=0-35% is different. Please refer to the Instruction Manual 1.7.
＊2 Drift is the change in DC output for an eight hour period after a half-hour warm-up at 25℃, with the input voltage held constant at the rated input/output.
＊3 Derating is required.
＊4 When two or more units are operating it may not comply with the IEC61000-3-2. Please contact us for details.
＊5 Please contact us about dynamic load and input response.
＊6 Please contact us about another class.
＊ To meet the specifications. Do not operate over-loaded condition.
＊ Parallel operation is not possible.
＊ Derating is required when operated with chassis and cover.
＊ Sound noise may be generated by power supply in case of pulse load.

February 06, 2026

Block diagram

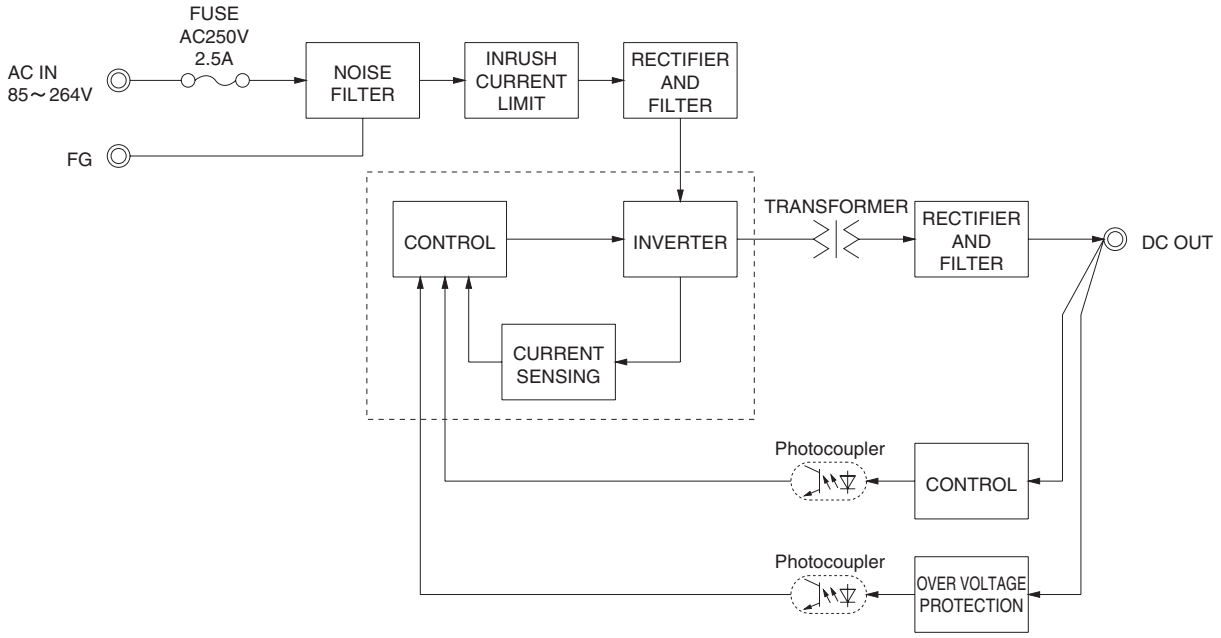

External view

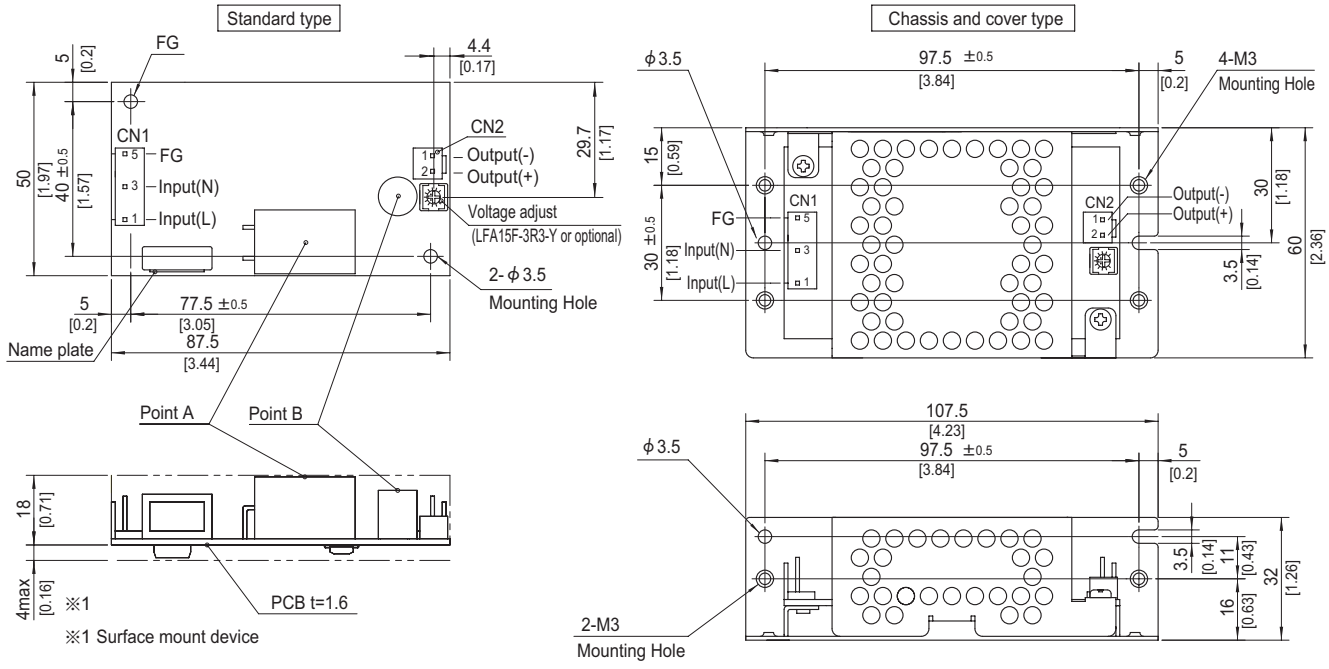

※ The back side of P.C.B. of the power supply is assembled some SMDs.
Be attention not to bump against the attached area by vibration.
※ Use the spacer of 8mm length or more regarding insulation.
And do not use press-fitting bush.
※ Point A, Point B are thermometry points. Please refer to Instruction Manual 3.

I/O Connector		Mating connector	Terminal	
CN1	1-1123724-3	1-1123722-5	Chain	1123721-1
			Loose	1318912-1
CN2	1-1123723-2	1-1123722-2	Chain	1123721-1
			Loose	1318912-1

(Mfr:Tyco Electronics)

※ I/O Connector is Mfr. Tyco Electronics
※ Option:-J1:(J.S.T) connector type. Refer to Instruction Manual 6.

<PIN CONNECTION>

CN1

Pin No.	Input
1	AC(L)
2	
3	AC(N)
4	
5	FG

CN2

Pin No.	Output
1	-V
2	+V

※ Tolerance : ±1 [±0.04]
※ Weight : 80g max (with chassis & cover : 190g max)
※ PCB material / thickness : CEM3 / 1.6mm
※ Optional chassis and cover material : Electric galvanizing steel board.
※ Dimensions in mm, [ ]=inches
※ Mounting torque (Mounting hole of chassis) : 0.6N・m (6.3kgf・cm) max

COSEL AC-DC Power Supplies Open Frame/ Enclosed Type

LFA30F

Ordering information

LF	A	30	F	-□	-□
①	②	③	④	⑤	⑥

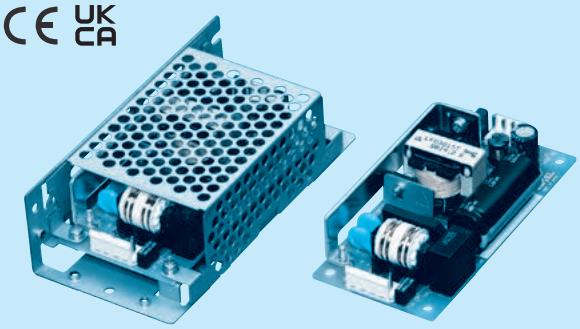

Example recommended EMI/EMC filter
NAC-04-472

High voltage pulse noise type : NAP series
Low leakage current type : NAM series

＊A higher current rating EMI/EMC filter may be recommended in view of the other devices that could be connected in parallel with the power supply.

①Series name
②Single output
③Output wattage
④Universal input
⑤Output voltage
⑥Optional
C : with Coating
G : Low leakage current
J1 : VH(J.S.T.)connector type
S : with Chassis
SN: with Chassis & cover
Y : with Potentiometer

Specification is changed at option, refer to Instruction Manual.

This power supply is manufactured by SMD technology. The stress to P.C.B like twisting or bending causes the defect of the unit, so handle the unit with care.
＊Make sure necessary tests will be carried out on your end equipment with the power supply installed in accordance with any required EMC/EMI regulations.

MODEL	LFA30F-3R3-Y	LFA30F-5	LFA30F-12	LFA30F-15	LFA30F-24
MAX OUTPUT WATTAGE[W]	19.8	30.0	30.0	30.0	31.2
DC OUTPUT	3.3V 6A	5V 6A	12V 2.5A	15V 2A	24V 1.3A

SPECIFICATIONS

	MODEL		LFA30F-3R3-Y	LFA30F-5	LFA30F-12	LFA30F-15	LFA30F-24
INPUT	VOLTAGE[V]		AC85 - 264 1ϕ (Refer to “Derating”, Instruction Manual 1 and 3) ＊3				
	CURRENT[A]	ACIN 100V	0.50typ (Io=100%)	0.65typ (Io=100%)			
		ACIN 200V	0.30typ (Io=100%)	0.35typ (Io=100%)			
	FREQUENCY[Hz]		50 / 60 (47 - 440)				
	EFFICIENCY[%]	ACIN 100V	73typ	76typ	79typ	81typ	82typ
		ACIN 200V	75typ	79typ	81typ	83typ	84typ
	INRUSH CURRENT[A]	ACIN 100V	15typ (Io=100%) (At cold start) (Ta=25℃)				
		ACIN 200V	30typ (Io=100%) (At cold start) (Ta=25℃)				
	LEAKAGE CURRENT[mA]		0.30 / 0.65max (ACIN 100V / 240V 60Hz, Io=100%, According to IEC62368-1 and DEN-AN)				
OUTPUT	VOLTAGE[V]		3.3	5	12	15	24
	CURRENT[A]		6.0	6.0	2.5	2.0	1.3
	LINE REGULATION[mV] ＊5		20max	20max	48max	60max	96max
	LOAD REGULATION[mV] ＊5		40max	40max	100max	120max	150max
	RIPPLE[mVp-p]	0 to +50℃＊1	80max	80max	120max	120max	120max
		-10 - 0℃ ＊1	140max	140max	160max	160max	160max
	RIPPLE NOISE[mVp-p]	0 to +50℃＊1	120max	120max	150max	150max	150max
		-10 - 0℃ ＊1	160max	160max	180max	180max	180max
	TEMPERATURE REGULATION[mV]	0 to +50℃	50max	50max	120max	150max	240max
		-10 to +50℃	60max	60max	150max	180max	290max
	DRIFT[mV] ＊2		20max	20max	48max	60max	96max
	START-UP TIME[ms]		150typ (ACIN 100V, Io=100%)				
	HOLD-UP TIME[ms]		20typ (ACIN 100V, Io=100%)				
	OUTPUT VOLTAGE ADJUSTMENT RANGE[V]		2.85 to 3.63	Fixed (“Y”option is available for adjusting output voltage between ±10%)			
	OUTPUT VOLTAGE SETTING[V]		3.30 to 3.40	4.90 to 5.30	11.50 to 12.50	14.40 to 15.60	23.00 to 25.00
PROTECTION CIRCUIT AND OTHERS	OVERCURRENT PROTECTION		Works over 105% of rating and recovers automatically				
	OVERVOLTAGE PROTECTION		4.00 to 5.25	5.75 to 7.00	13.80 to 16.80	17.25 to 21.00	27.60 to 33.60
	OPERATING INDICATION		Not provided				
	REMOTE SENSING		Not provided				
	REMOTE ON/OFF		Not provided				
ISOLATION	INPUT-OUTPUT		AC3,000V 1minute, Cutoff current = 10mA, DC500V 50MΩ min (At Room Temperature)				
	INPUT-FG		AC2,000V 1minute, Cutoff current = 10mA, DC500V 50MΩ min (At Room Temperature)				
	OUTPUT-FG		AC500V 1minute, Cutoff current = 25mA, DC500V 50MΩ min (At Room Temperature)				
ENVIRONMENT	OPERATING TEMP.,HUMID.AND ALTITUDE		-10 to +70℃, 20 - 90%RH (Non condensing) (Refer to “Derating”, Instruction Manual 3), 3,000m (10,000feet) max ＊3				
	STORAGE TEMP.,HUMID.AND ALTITUDE		-20 to +75℃, 20 - 90%RH (Non condensing), 9,000m (30,000feet) max				
	VIBRATION		10 - 55Hz, 19.6m/s² (2G), 3minutes period, 60minutes each along X, Y and Z axis				
	IMPACT		196.1m/s² (20G), 11ms, once each X, Y and Z axis				
SAFETY AND NOISE REGULATIONS	AGENCY APPROVALS		UL60950-1, C-UL (CSA60950-1), EN62368-1 Complies with DEN-AN				
	CONDUCTED NOISE		Complies with FCC-B, VCCI-B, CISPR-B, EN55011-B, EN55022-B				
	HARMONIC ATTENUATOR		Complies with IEC61000-3-2 (Class A) ＊6 (Not built-in to active filter) ＊4				
OTHERS	CASE SIZE/WEIGHT		50×26.5×105mm [1.97×1.04×4.13 inches] (W×H×D) / 130g max (with chassis & cover : 260g max)				
	COOLING METHOD		Convection (Refer to “Derating”, Instruction Manual 3) ＊3				

＊1 This is the value that measured on measuring board with capacitor of 22μF at 150mm from output terminal.
Measured by 20MHz oscilloscope or Ripple-Noise meter (Equivalent to KEISOKU-GIKEN: RM103).
＊2 Drift is the change in DC output for an eight hour period after a half-hour warm-up at 25℃, with the input voltage held constant at the rated input/output.
＊3 Derating is required.
＊4 When two or more units are operating it may not comply with the IEC61000-3-2. Please contact us for details.
＊5 Please contact us about dynamic load and input response.
＊6 Please contact us about another class.
＊ To meet the specifications. Do not operate over-loaded condition.
＊ Parallel operation is not possible.
＊ Derating is required when operated with chassis and cover.
＊ Sound noise may be generated by power supply in case of pulse load.

Block diagram

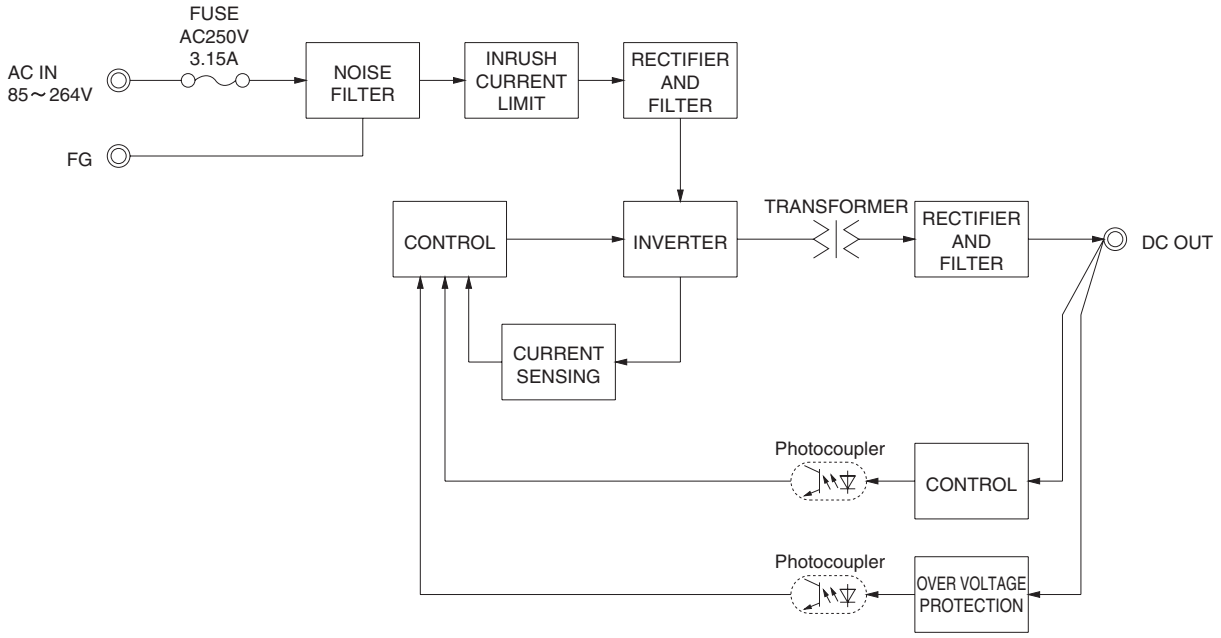

External view

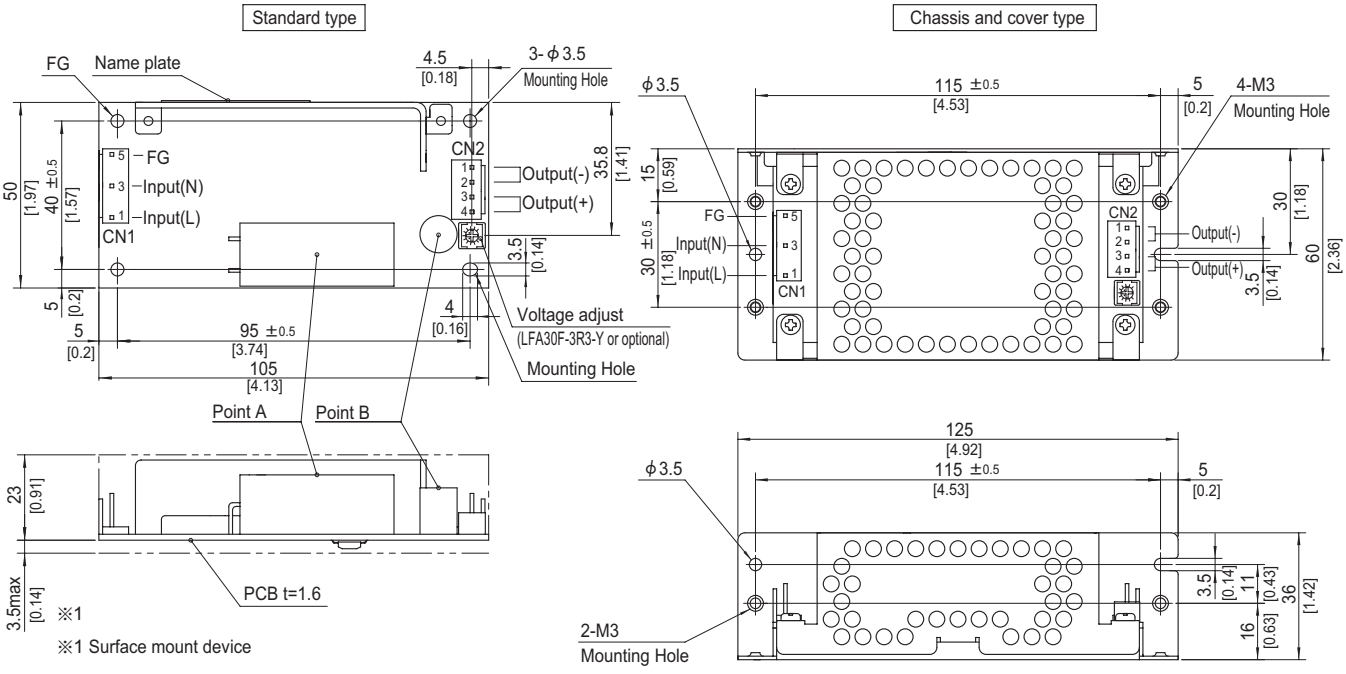

※ 4 Mounting holes are existing.
※ The back side of P.C.B. of the power supply is assembled some SMDs.
Be attention not to bump against the attached area by vibration.
※ Use the spacer of 8mm length or more regarding insulation.
And do not use press-fitting bush.
※ Point A, Point B are thermometry points. Please refer to Instruction Manual 3.

I/O Connector		Mating connector	Terminal	
CN1	1-1123724-3	1-1123722-5	Chain	1123721-1
			Loose	1318912-1
CN2	1-1123723-4	1-1123722-4	Chain	1123721-1
			Loose	1318912-1

(Mfr:Tyco Electronics)

※ I/O Connector is Mfr. Tyco Electronics
※ Option:-J1:(J.S.T) connector type. Refer to Instruction Manual 6.

<PIN CONNECTION>

CN1

Pin No.	Input
1	AC(L)
2	
3	AC(N)
4	
5	FG

CN2

Pin No.	Output
1, 2	-V
3, 4	+V

※ Keep drawing current per pin below 5A for CN2.

※ Tolerance : ±1 [±0.04]
※ Weight: 130g max (with chassis & cover : 260g max)
※ PCB material / thickness : CEM3 / 1.6mm
※ Optional chassis and cover material : Electric galvanizing steel board.
※ Dimensions in mm, [ ]=inches
※ Mounting torque (Mounting hole of chassis) : 0.6N・m (6.3kgf・cm) max

COSEL AC-DC Power Supplies Open Frame/ Enclosed Type

LFA50F

Ordering information

LF	A	50	F	-□	-□
①	②	③	④	⑤	⑥

RoHS

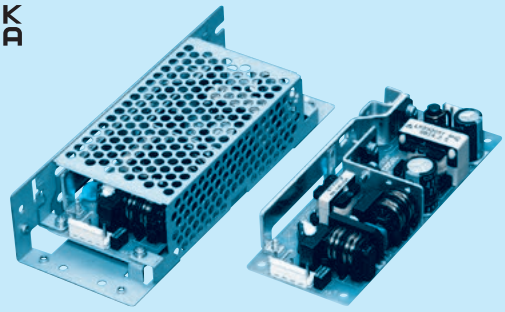

Example recommended EMI/EMC filter
NAC-04-472

High voltage pulse noise type : NAP series
Low leakage current type : NAM series

＊A higher current rating EMI/EMC filter may be recommended in view of the other devices that could be connected in parallel with the power supply.

①Series name
②Single output
③Output wattage
④Universal input
⑤Output voltage
⑥Optional
C : with Coating
G : Low leakage current
J1 : VH(J.S.T.)connector type
S : with Chassis
SN: with Chassis & cover
Y : with Potentiometer

Specification is changed at option, refer to Instruction Manual.

This power supply is manufactured by SMD technology. The stress to P.C.B like twisting or bending causes the defect of the unit, so handle the unit with care.
＊Make sure necessary tests will be carried out on your end equipment with the power supply installed in accordance with any required EMC/EMI regulations.

MODEL	LFA50F-3R3-Y	LFA50F-5	LFA50F-12	LFA50F-15	LFA50F-24	LFA50F-36	LFA50F-48
MAX OUTPUT WATTAGE[W]	33	50	51.6	52.5	50.4	50.4	52.8
DC OUTPUT	3.3V 10A	5V 10A	12V 4.3A	15V 3.5A	24V 2.1A	36V 1.4A	48V 1.1A

SPECIFICATIONS

	MODEL		LFA50F-3R3-Y	LFA50F-5	LFA50F-12	LFA50F-15	LFA50F-24	LFA50F-36	LFA50F-48
INPUT	VOLTAGE[V]		AC85 - 264 1φ (Refer to “Derating”, Instruction Manual 1 and 3) ＊3						
	CURRENT[A]	ACIN 100V	0.47typ (Io=100%)	0.67typ (Io=100%)					
		ACIN 200V	0.27typ (Io=100%)	0.36typ (Io=100%)					
	FREQUENCY[Hz]		50 / 60 (47 - 63)						
	EFFICIENCY[%]	ACIN 100V	73.5typ	77.5typ	80.0typ	80.5typ	81.5typ	82.0typ	81.0typ
		ACIN 200V	74.0typ	79.0typ	81.5typ	81.5typ	83.0typ	83.5typ	82.5typ
	POWER FACTOR (Io=100%)	ACIN 100V	0.96typ	0.97typ					
		ACIN 200V	0.83typ	0.90typ					
	INRUSH CURRENT[A]	ACIN 100V	15typ (Io=100%) (At cold start) (Ta=25℃)						
		ACIN 200V	30typ (Io=100%) (At cold start) (Ta=25℃)						
	LEAKAGE CURRENT[mA]		0.40 / 0.75max (ACIN 100V / 240V 60Hz, Io=100%, According to IEC62368-1 and DEN-AN)						
OUTPUT	VOLTAGE[V]		3.3	5	12	15	24	36	48
	CURRENT[A]		10.0	10.0	4.3	3.5	2.1	1.4	1.1
	LINE REGULATION[mV] ＊4		20max	20max	48max	60max	96max	144max	192max
	LOAD REGULATION[mV] ＊4		40max	40max	100max	120max	150max	240max	240max
	RIPPLE[mVp-p]	0 to +50℃ ＊1	80max	80max	120max	120max	120max	150max	150max
		-10 - 0℃ ＊1	140max	140max	160max	160max	160max	200max	200max
	RIPPLE NOISE[mVp-p]	0 to +50℃ ＊1	120max	120max	150max	150max	150max	250max	250max
		-10 - 0℃ ＊1	160max	160max	180max	180max	180max	300max	300max
	TEMPERATURE REGULATION[mV]	0 to +50℃	50max	50max	120max	150max	240max	360max	480max
		-10 to +50℃	60max	60max	150max	180max	290max	450max	600max
	DRIFT[mV]	＊2	20max	20max	48max	60max	96max	144max	192max
	START-UP TIME[ms]		350typ (ACIN 100V, Io=100%)						
	HOLD-UP TIME[ms]		20typ (ACIN 100V, Io=100%)						
	OUTPUT VOLTAGE ADJUSTMENT RANGE[V]		2.85 to 3.63	Fixed (“Y”option is available for adjusting output voltage between ±10%)					
	OUTPUT VOLTAGE SETTING[V]		3.30 to 3.40	4.90 to 5.30	11.50 to 12.50	14.40 to 15.60	23.00 to 25.00	34.50 to 37.50	46.00 to 50.00
PROTECTION CIRCUIT AND OTHERS	OVERCURRENT PROTECTION		Works over 105% of rating and recovers automatically						
	OVERVOLTAGE PROTECTION		4.00 to 5.25	5.75 to 7.00	13.80 to 16.80	17.25 to 21.00	27.60 to 33.60	41.40 to 50.40	55.20 to 67.20
	OPERATING INDICATION		Not provided						
	REMOTE SENSING		Not provided						
	REMOTE ON/OFF		Not provided						
ISOLATION	INPUT-OUTPUT		AC3,000V 1minute, Cutoff current = 10mA, DC500V 50MΩ min (At Room Temperature)						
	INPUT-FG		AC2,000V 1minute, Cutoff current = 10mA, DC500V 50MΩ min (At Room Temperature)						
	OUTPUT-FG		AC500V 1minute, Cutoff current = 25mA, DC500V 50MΩ min (At Room Temperature)						
ENVIRONMENT	OPERATING TEMP.,HUMID.AND ALTITUDE		-10 to +70℃, 20 - 90%RH (Non condensing) (Refer to “Derating”, Instruction Manual 3), 3,000m (10,000feet) max ＊3						
	STORAGE TEMP.,HUMID.AND ALTITUDE		-20 to +75℃, 20 - 90%RH (Non condensing), 9,000m (30,000feet) max						
	VIBRATION		10 - 55Hz, 19.6m/s² (2G), 3minutes period, 60minutes each along X, Y and Z axis						
	IMPACT		196.1m/s² (20G), 11ms, once each X, Y and Z axis						
SAFETY AND NOISE REGULATIONS	AGENCY APPROVALS		UL60950-1, C-UL (CSA60950-1), EN62368-1 Complies with DEN-AN						
	CONDUCTED NOISE		Complies with FCC-B, VCCI-B, CISPR-B, EN55011-B, EN55022-B						
	HARMONIC ATTENUATOR		Complies with IEC61000-3-2 (Class A) ＊5						
OTHERS	CASE SIZE/WEIGHT		50×26.5×132mm [1.97×1.04×5.20 inches] (W×H×D) / 165g max (with chassis & cover : 325g max)						
	COOLING METHOD		Convection (Refer to “Derating”, Instruction Manual 3) ＊3						

＊1 This is the value that measured on measuring board with capacitor of 22μF at 150mm from output terminal.
Measured by 20MHz oscilloscope or Ripple-Noise meter (Equivalent to KEISOKU-GIKEN: RM103).
＊2 Drift is the change in DC output for an eight hour period after a half-hour warm-up at 25℃, with the input voltage held constant at the rated input/output.
＊3 Derating is required.
＊4 Please contact us about dynamic load and input response.
＊5 Please contact us about another class.
＊ To meet the specifications. Do not operate over-loaded condition.
＊ Parallel operation is not possible.
＊ Derating is required when operated with chassis and cover.
＊ Sound noise may be generated by power supply in case of pulse load.

Block diagram

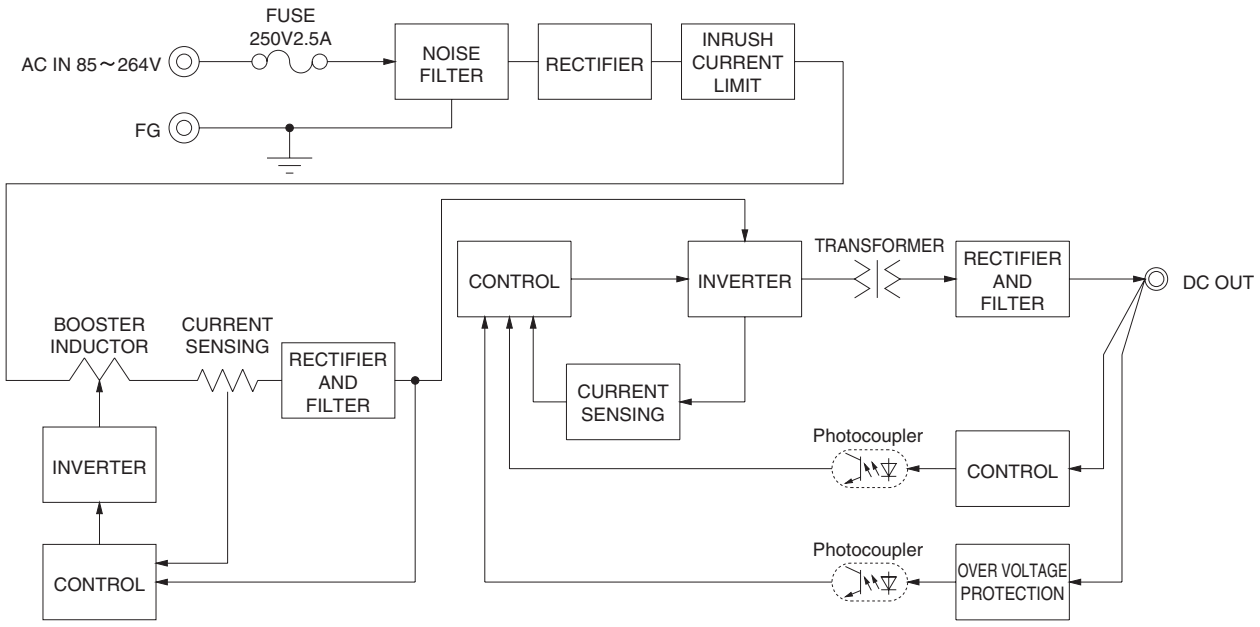

External view

Standard type

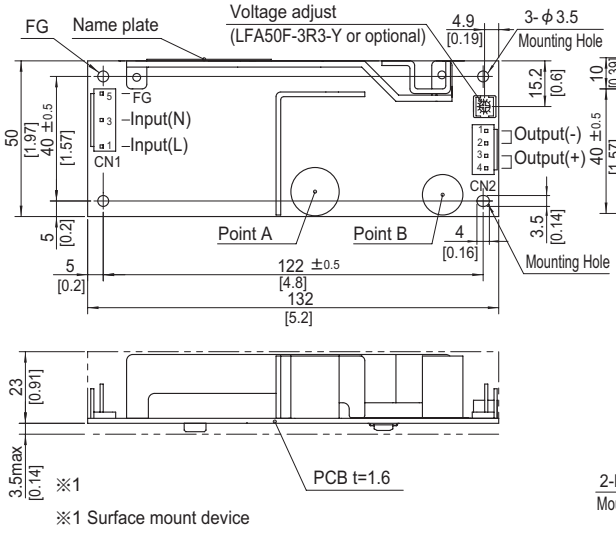

※1 Surface mount device

Chassis and cover type

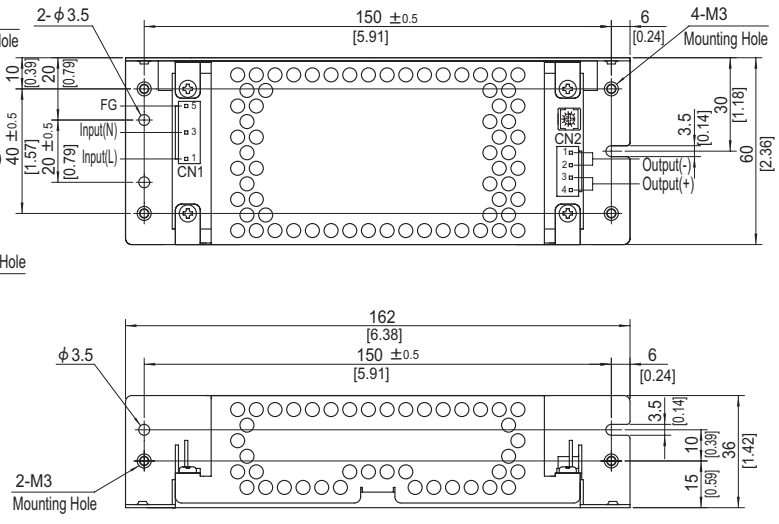

※ 4 Mounting holes are existing.
※ The back side of P.C.B. of the power supply is assembled some SMDs.
Be attention not to bump against the attached area by vibration.
※ Use the spacer of 8mm length or more regarding insulation.
And do not use press-fitting bush.
※ Point A, Point B are thermometry points. Please refer to Instruction Manual 3.

I/O Connector		Mating connector	Terminal	
CN1	1-1123724-3	1-1123722-5	Chain	1123721-1
			Loose	1318912-1
CN2	1-1123723-4	1-1123722-4	Chain	1123721-1
			Loose	1318912-1

(Mfr:Tyco Electronics)

※ I/O Connector is Mfr. Tyco Electronics
※ Option:-J1:(J.S.T) connector type. Refer to Instruction Manual 6.

<PIN CONNECTION>

CN1

Pin No.	Input
1	AC(L)
2	
3	AC(N)
4	
5	FG

CN2

Pin No.	Output
1, 2	-V
3, 4	+V

※ Keep drawing current per pin below 5A for CN2.

※ Tolerance : ±1 [±0.04]
※ Weight : 165g max (with chassis & cover : 325g max)
※ PCB material / thickness : CEM3 / 1.6mm
※ Optional chassis and cover material : Electric galvanizing steel board.
※ Dimensions in mm, [ ]=inches
※ Mounting torque (Mounting hole of chassis) : 0.6N・m (6.3kgf・cm) max

COSEL AC-DC Power Supplies Open Frame/ Enclosed Type

LFA75F

Ordering information

LF	A	75	F	-□	-□
①	②	③	④	⑤	⑥

RoHS

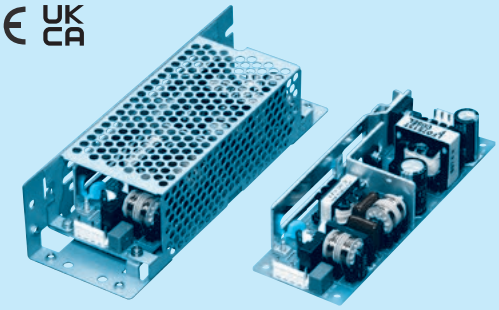

Example recommended EMI/EMC filter
NAC-04-472

High voltage pulse noise type : NAP series
Low leakage current type : NAM series

＊A higher current rating EMI/EMC filter may be recommended in view of the other devices that could be connected in parallel with the power supply.

①Series name
②Single output
③Output wattage
④Universal input
⑤Output voltage
⑥Optional
C : with Coating
G : Low leakage current
J1 : VH(J.S.T.)connector type
S : with Chassis
SN: with Chassis & cover
Y : with Potentiometer

Specification is changed at option, refer to Instruction Manual.

This power supply is manufactured by SMD technology. The stress to P.C.B like twisting or bending causes the defect of the unit, so handle the unit with care.
＊Make sure necessary tests will be carried out on your end equipment with the power supply installed in accordance with any required EMC/EMI regulations.

MODEL	LFA75F-3R3-Y	LFA75F-5	LFA75F-12	LFA75F-15	LFA75F-24	LFA75F-36	LFA75F-48
MAX OUTPUT WATTAGE[W]	49.5	75	75.6	75	76.8	75.6	76.8
DC OUTPUT	3.3V 15A	5V 15A	12V 6.3A	15V 5A	24V 3.2A	36V 2.1A	48V 1.6A

SPECIFICATIONS

	MODEL		LFA75F-3R3-Y	LFA75F-5	LFA75F-12	LFA75F-15	LFA75F-24	LFA75F-36	LFA75F-48
INPUT	VOLTAGE[V]		AC85 - 264 1φ (Refer to "Derating", Instruction Manual 1 and 3) ＊3						
	CURRENT[A]	ACIN 100V	0.70typ (Io=100%)	1.00typ (Io=100%)					
		ACIN 200V	0.40typ (Io=100%)	0.50typ (Io=100%)					
	FREQUENCY[Hz]		50 / 60 (47 - 63)						
	EFFICIENCY[%]	ACIN 100V	73.5typ	78.0typ	81.5typ	81.5typ	82.5typ	82.5typ	82.5typ
		ACIN 200V	75.0typ	80.0typ	83.0typ	83.0typ	84.5typ	84.5typ	84.5typ
	POWER FACTOR (Io=100%)	ACIN 100V	0.96typ	0.97typ					
		ACIN 200V	0.83typ	0.90typ					
	INRUSH CURRENT[A]	ACIN 100V	15typ (Io=100%) (At cold start) (Ta=25℃)						
		ACIN 200V	30typ (Io=100%) (At cold start) (Ta=25℃)						
	LEAKAGE CURRENT[mA]		0.40 / 0.75max (ACIN 100V / 240V 60Hz, Io=100%, According to IEC62368-1 and DEN-AN)						
OUTPUT	VOLTAGE[V]		3.3	5	12	15	24	36	48
	CURRENT[A]		15.0	15.0	6.3	5.0	3.2	2.1	1.6
	LINE REGULATION[mV] ＊4		20max	20max	48max	60max	96max	144max	192max
	LOAD REGULATION[mV] ＊4		40max	40max	100max	120max	150max	240max	240max
	RIPPLE[mVp-p]	0 to +50℃ ＊1	80max	80max	120max	120max	120max	150max	150max
		-10 - 0℃ ＊1	140max	140max	160max	160max	160max	200max	200max
	RIPPLE NOISE[mVp-p]	0 to +50℃ ＊1	120max	120max	150max	150max	150max	250max	250max
		-10 - 0℃ ＊1	160max	160max	180max	180max	180max	300max	300max
	TEMPERATURE REGULATION[mV]	0 to +50℃	50max	50max	120max	150max	240max	360max	480max
		-10 to +50℃	60max	60max	150max	180max	290max	450max	600max
	DRIFT[mV]	＊2	20max	20max	48max	60max	96max	144max	192max
	START-UP TIME[ms]		350typ (ACIN 100V, Io=100%)						
	HOLD-UP TIME[ms]		20typ (ACIN 100V, Io=100%)						
	OUTPUT VOLTAGE ADJUSTMENT RANGE[V]		2.85 to 3.63	Fixed ("Y"option is available for adjusting output voltage between ±10%)					
	OUTPUT VOLTAGE SETTING[V]		3.30 to 3.40	4.90 to 5.30	11.50 to 12.50	14.40 to 15.60	23.00 to 25.00	34.50 to 37.50	46.00 to 50.00
PROTECTION CIRCUIT AND OTHERS	OVERCURRENT PROTECTION		Works over 105% of rating and recovers automatically						
	OVERVOLTAGE PROTECTION		4.00 to 5.25	5.75 to 7.00	13.80 to 16.80	17.25 to 21.00	27.60 to 33.60	41.40 to 50.40	55.20 to 67.20
	OPERATING INDICATION		Not provided						
	REMOTE SENSING		Not provided						
	REMOTE ON/OFF		Not provided						
ISOLATION	INPUT-OUTPUT		AC3,000V 1minute, Cutoff current = 10mA, DC500V 50MΩ min (At Room Temperature)						
	INPUT-FG		AC2,000V 1minute, Cutoff current = 10mA, DC500V 50MΩ min (At Room Temperature)						
	OUTPUT-FG		AC500V 1minute, Cutoff current = 25mA, DC500V 50MΩ min (At Room Temperature)						
ENVIRONMENT	OPERATING TEMP.,HUMID.AND ALTITUDE		-10 to +70℃, 20 - 90%RH (Non condensing) (Refer to "Derating", Instruction Manual 3), 3,000m (10,000feet) max ＊3						
	STORAGE TEMP.,HUMID.AND ALTITUDE		-20 to +75℃, 20 - 90%RH (Non condensing), 9,000m (30,000feet) max						
	VIBRATION		10 - 55Hz, 19.6m/s² (2G), 3minutes period, 60minutes each along X, Y and Z axis						
	IMPACT		196.1m/s² (20G), 11ms, once each X, Y and Z axis						
SAFETY AND NOISE REGULATIONS	AGENCY APPROVALS		UL60950-1, C-UL (CSA60950-1), EN62368-1 Complies with DEN-AN						
	CONDUCTED NOISE		Complies with FCC-B, VCCI-B, CISPR-B, EN55011-B, EN55022-B						
	HARMONIC ATTENUATOR		Complies with IEC61000-3-2 (Class A) ＊5						
OTHERS	CASE SIZE/WEIGHT		50×33.5×150mm [1.97×1.32×5.91 inches] (W×H×D) / 230g max (with chassis & cover : 440g max)						
	COOLING METHOD		Convection (Refer to "Derating", Instruction Manual 3) ＊3						

＊1 This is the value that measured on measuring board with capacitor of 22μF at 150mm from output terminal.
Measured by 20MHz oscilloscope or Ripple-Noise meter (Equivalent to KEISOKU-GIKEN: RM103).
＊2 Drift is the change in DC output for an eight hour period after a half-hour warm-up at 25℃, with the input voltage held constant at the rated input/output.
＊3 Derating is required.
＊4 Please contact us about dynamic load and input response.
＊5 Please contact us about another class.
＊ To meet the specifications. Do not operate over-loaded condition.
＊ Parallel operation is not possible.
＊ Derating is required when operated with chassis and cover.
＊ Sound noise may be generated by power supply in case of pulse load.

Block diagram

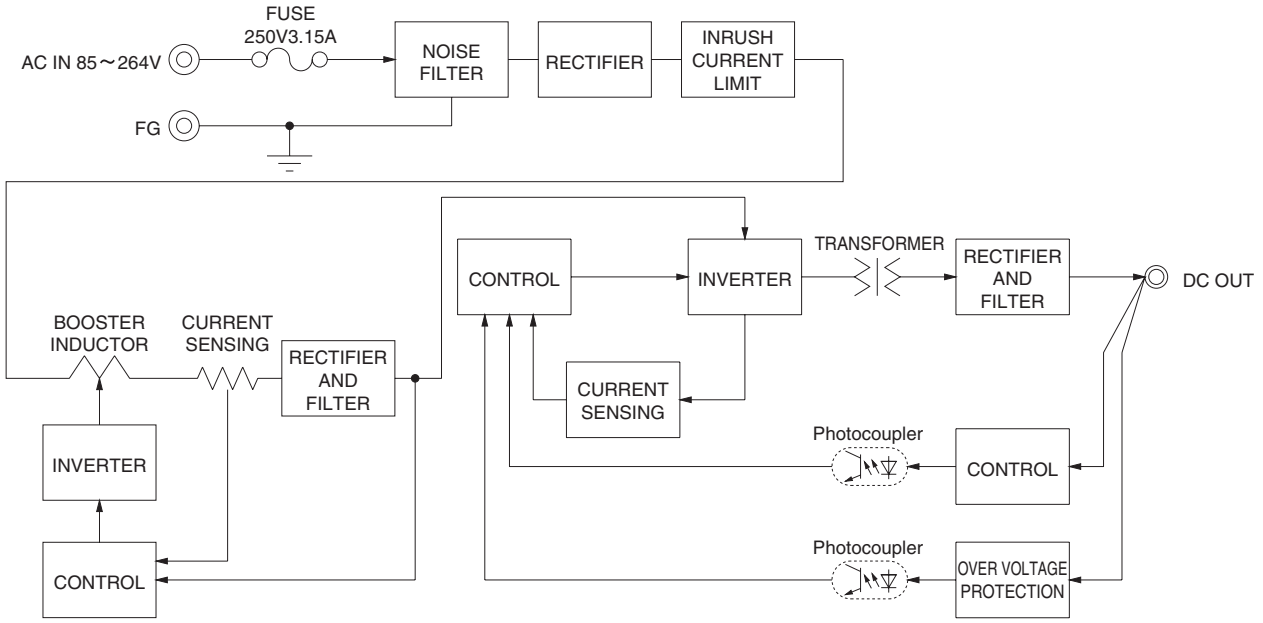

External view

Standard type

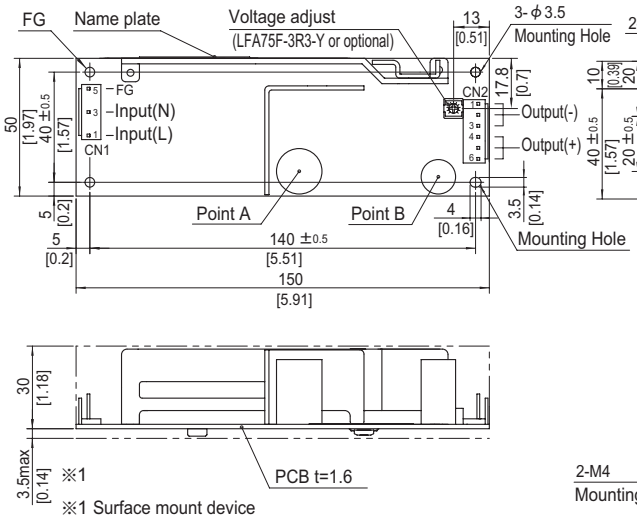

Chassis and cover type

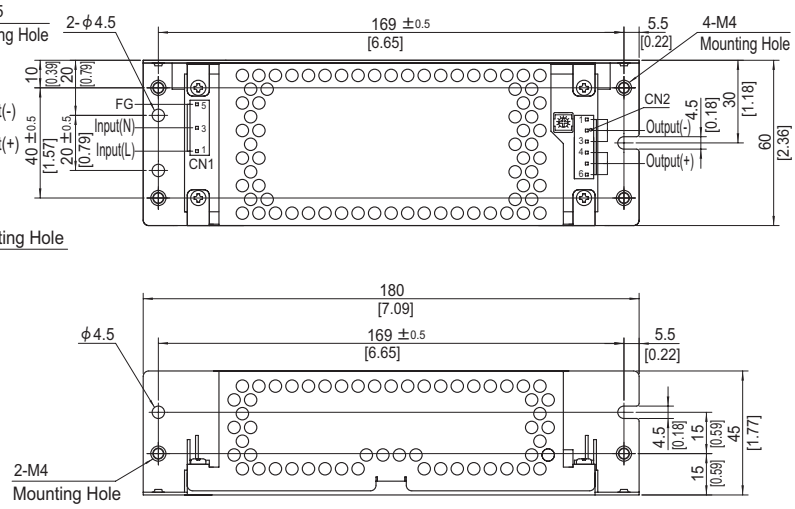

※ 4 Mounting holes are existing.
※ The back side of P.C.B. of the power supply is assembled some SMDs.
Be attention not to bump against the attached area by vibration.
※ Use the spacer of 8mm length or more regarding insulation.
And do not use press-fitting bush.
※ Point A, Point B are thermometry points. Please refer to Instruction Manual 3.

I/O Connector		Mating connector	Terminal	
CN1	1-1123724-3	1-1123722-5	Chain	1123721-1
			Loose	1318912-1
CN2	1-1123723-6	1-1123722-6	Chain	1123721-1
			Loose	1318912-1

(Mfr:Tyco Electronics)

※ I/O Connector is Mfr. Tyco Electronics
※ Option:-J1:(J.S.T) connector type. Refer to Instruction Manual 6.

<PIN CONNECTION>

CN1

Pin No.	Input
1	AC(L)
2	
3	AC(N)
4	
5	FG

CN2

Pin No.	Output
1 to 3	-V
4 to 6	+V

※ Keep drawing current per pin below 5A for CN2.

※ Tolerance : ±1 [±0.04]
※ Weight : 230g max (with chassis & cover : 440g max)
※ PCB material / thickness : CEM3 / 1.6mm
※ Optional chassis and cover material : Electric galvanizing steel board.
※ Dimensions in mm, [ ]=inches
※ Mounting torque (Mounting hole of chassis) :1.5N・m (16kgf・cm) max

COSEL AC-DC Power Supplies Open Frame/ Enclosed Type

LFA100F

Ordering information

LF	A	100	F	-□	-□
①	②	③	④	⑤	⑥

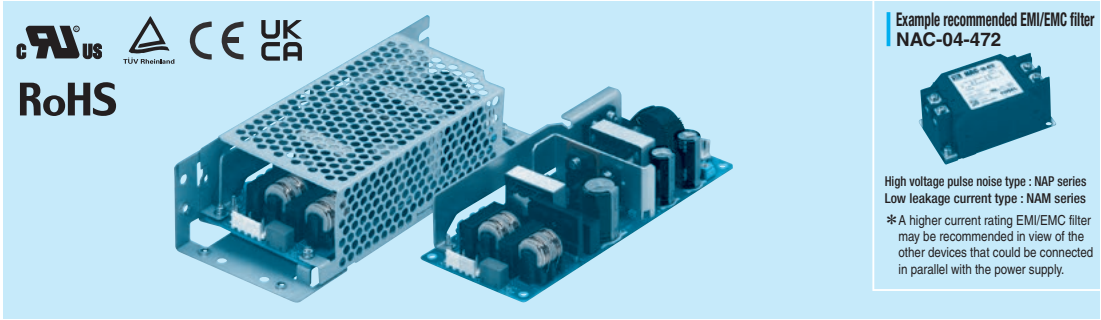

Example recommended EMI/EMC filter
NAC-04-472

High voltage pulse noise type : NAP series
Low leakage current type : NAM series

∗A higher current rating EMI/EMC filter may be recommended in view of the other devices that could be connected in parallel with the power supply.

①Series name
②Single output
③Output wattage
④Universal input
⑤Output voltage
⑥Optional ∗1
C : with Coating
G : Low leakage current
H : with the function to be acceptable to output peak current (only 24V)
J1 : VH(J.S.T.)connector type
R : with Remote ON/OFF
R2 : with Remote ON/OFF
S : with Chassis
SN : with Chassis & cover
Y : with Potentiometer
Please refer to Instruction manual 6.

This power supply is manufactured by SMD technology. The stress to P.C.B like twisting or bending causes the defect of the unit, so handle the unit with care.
∗Make sure necessary tests will be carried out on your end equipment with the power supply installed in accordance with any required EMC/EMI regulations.

MODEL	LFA100F-3R3-Y	LFA100F-5-Y	LFA100F-12	LFA100F-15	LFA100F-24	LFA100F-24-H	LFA100F-36	LFA100F-48
MAX OUTPUT WATTAGE[W] ∗5	66	100	102	100.5	103.2	103.2 (129.6)	100.8	100.8
DC OUTPUT ∗5	3.3V 20A	5V 20A	12V 8.5A	15V 6.7A	24V 4.3A	24V 4.3 (5.4)A	36V 2.8A	48V 2.1A

SPECIFICATIONS

	MODEL		LFA100F-3R3-Y	LFA100F-5-Y	LFA100F-12	LFA100F-15	LFA100F-24	LFA100F-24-H	LFA100F-36	LFA100F-48
INPUT	VOLTAGE[V]		AC85 - 264 1ϕ (Refer to "Derating", Instruction Manual 1 and 3) ∗4							
	CURRENT[A]	ACIN 100V	0.9typ (Io=100%)	1.3typ (Io=100%)						
		ACIN 200V	0.5typ (Io=100%)	0.7typ (Io=100%)						
	FREQUENCY[Hz]		50 / 60 (47 - 63)							
	EFFICIENCY[%]	ACIN 100V	77.0typ	82.0typ	82.0typ	83.0typ	84.0typ	84.0typ	84.0typ	84.5typ
		ACIN 200V	79.0typ	84.0typ	84.5typ	85.5typ	87.0typ	87.0typ	87.0typ	87.0typ
	POWER FACTOR (Io=100%)	ACIN 100V	0.98typ	0.99typ						
		ACIN 200V	0.92typ	0.95typ						
	INRUSH CURRENT[A]	ACIN 100V	15typ (Io=100%) (At cold start) (Ta=25℃)							
		ACIN 200V	30typ (Io=100%) (At cold start) (Ta=25℃)							
	LEAKAGE CURRENT[mA]		0.40 / 0.75max (ACIN 100V / 240V 60Hz, Io=100%, According to IEC62368-1 and DEN-AN)							
OUTPUT	VOLTAGE[V]		3.3	5	12	15	24	24	36	48
	CURRENT[A] ∗5		20	20	8.5	6.7	4.3	4.3 (Peak 5.4)	2.8	2.1
	LINE REGULATION[mV] ∗7		20max	20max	48max	60max	96max	96max	144max	192max
	LOAD REGULATION[mV] ∗7		40max	40max	100max	120max	150max	150max	240max	240max
	RIPPLE[mVp-p]	0 to +50℃ ∗2	80max	80max	120max	120max	120max	240max	150max	150max
		-10 - 0℃ ∗2	140max	140max	160max	160max	160max	320max	200max	200max
	RIPPLE NOISE[mVp-p]	0 to +50℃ ∗2	120max	120max	150max	150max	150max	300max	250max	250max
		-10 - 0℃ ∗2	160max	160max	180max	180max	180max	360max	300max	300max
	TEMPERATURE REGULATION[mV]	0 to +50℃	50max	50max	120max	150max	240max	240max	360max	480max
		-10 to +50℃	60max	60max	150max	180max	290max	290max	450max	600max
	DRIFT[mV] ∗3		20max	20max	48max	60max	96max	96max	144max	192max
	START-UP TIME[ms]		350typ (ACIN 100V, Io=100%)							
	HOLD-UP TIME[ms]		20typ (ACIN 100V, Io=100%)							
	OUTPUT VOLTAGE ADJUSTMENT RANGE[V]		2.85 to 3.63	4.50 to 5.50	Fixed ("Y"option is available for adjusting output voltage)					
	OUTPUT VOLTAGE SETTING[V]		3.30 to 3.40	5.00 to 5.15	11.50 to 12.50	14.40 to 15.60	23.00 to 25.00	23.00 to 25.00	34.50 to 37.50	46.00 to 50.00
PROTECTION CIRCUIT AND OTHERS	OVERCURRENT PROTECTION		Works over 105% of rating (works over 101% of peak current at option -H) and recovers automatically							
	OVERVOLTAGE PROTECTION		4.00 to 5.25	5.75 to 7.00	13.80 to 16.80	17.25 to 21.00	27.60 to 33.60	27.60 to 33.60	41.40 to 50.40	55.20 to 67.20
	OPERATING INDICATION		Not provided							
	REMOTE SENSING		Not provided							
	REMOTE ON/OFF		Option (Refer to Instruction Manual)							
ISOLATION	INPUT-OUTPUT-RC ∗6		AC3,000V 1minute, Cutoff current = 10mA, DC500V 50MΩ min (At Room Temperature)							
	INPUT-FG		AC2,000V 1minute, Cutoff current = 10mA, DC500V 50MΩ min (At Room Temperature)							
	OUTPUT-RC-FG ∗6		AC500V 1minute, Cutoff current = 25mA, DC500V 50MΩ min (At Room Temperature)							
	OUTPUT-RC ∗6		AC100V 1minute, Cutoff current = 25mA, DC100V 10MΩ min (At Room Temperature)							
ENVIRONMENT	OPERATING TEMP.,HUMID.AND ALTITUDE ∗4		-10 to +70℃, 20 - 90%RH (Non condensing) (Refer to "Derating", Instruction Manual 3), 3,000m (10,000feet) max							
	STORAGE TEMP.,HUMID.AND ALTITUDE		-20 to +75℃, 20 - 90%RH (Non condensing), 9,000m (30,000feet) max							
	VIBRATION		10 - 55Hz, 19.6m/s² (2G), 3minutes period, 60minutes each along X, Y and Z axis							
	IMPACT		196.1m/s² (20G), 11ms, once each X, Y and Z axis							
SAFETY AND NOISE REGULATIONS	AGENCY APPROVALS		UL60950-1, C-UL (CSA60950-1), EN62368-1 Complies with DEN-AN							
	CONDUCTED NOISE		Complies with FCC-B, VCCI-B, CISPR-B, EN55011-B, EN55022-B							
	HARMONIC ATTENUATOR		Complies with IEC61000-3-2 (Class A) ∗8							
OTHERS	CASE SIZE/WEIGHT		62×33.5×155mm [2.44×1.32×6.10 inches] (W×H×D) / 280g max (with chassis & cover : 480g max)							
	COOLING METHOD		Convection (Refer to "Derating", Instruction Manual 3) ∗4							

∗1 Specification is changed at option, refer to Instruction Manual.
∗2 This is the value that measured on measuring board with capacitor of 22μF at 150mm from output terminal. Measured by 20MHz oscilloscope or Ripple-Noise meter (Equivalent to KEISOKU-GIKEN: RM103).
∗3 Drift is the change in DC output for an eight hour period after a half-hour warm-up at 25℃, with the input voltage held constant at the rated input/output.
∗4 Derating is required.
∗5 ( ) means peak current. There is a possibility that an internal device is damaged when the specification is exceeded. Please contact us about the detail.
∗6 Applicable when Remote ON/OFF (optional) is added.
∗7 Please contact us about dynamic load and input response.
∗8 Please contact us about another class.
∗ To meet the specifications. Do not operate over-loaded condition.
∗ Parallel operation is not possible.
∗ Derating is required when operated with chassis and cover.
∗ Sound noise may be generated by power supply in case of pulse load.

Block diagram

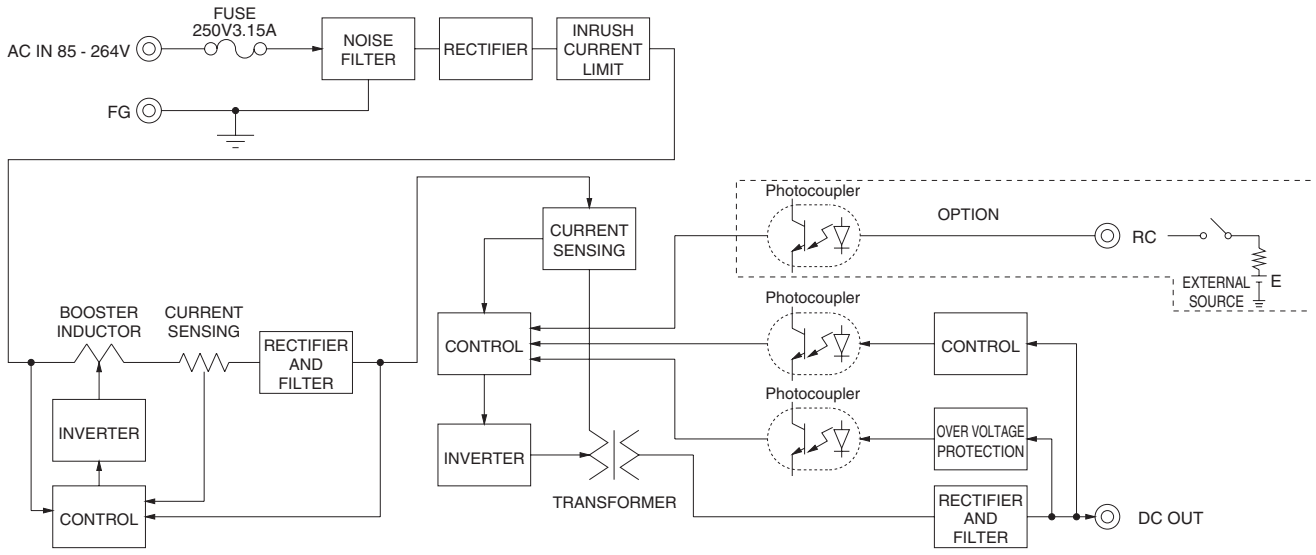

External view

※ External size of option is different from standard model.

Standard type

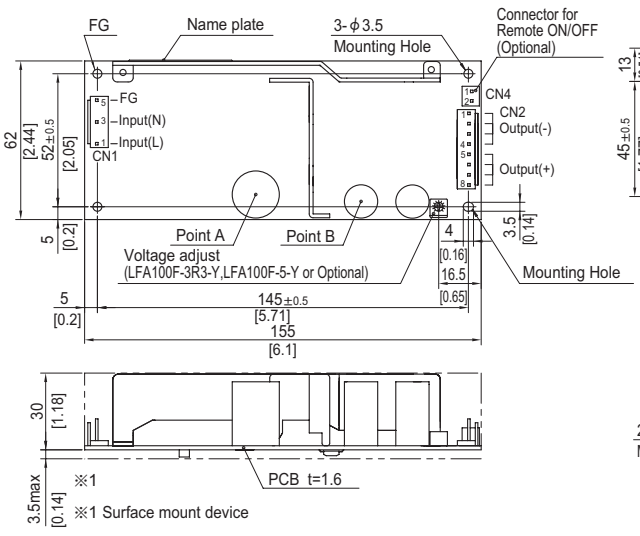

※1 Surface mount device

Chassis and cover type

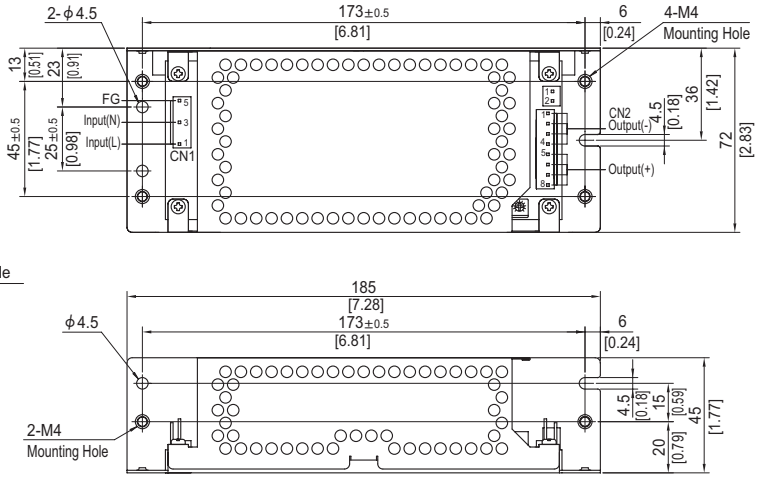

※ 4 Mounting holes are existing.
※ The back side of P.C.B. of the power supply is assembled some SMDs.
Be attention not to bump against the attached area by vibration.
※ Use the spacer of 8mm length or more regarding insulation.
And do not use press-fitting bush.
※ Point A, Point B are thermometry points. Please refer to Instruction Manual 3.

I/O Connector		Mating connector	Terminal	
CN1	1-1123724-3	1-1123722-5	Chain	1123721-1
			Loose	1318912-1
CN2	1-1123723-8	1-1123722-8	Chain	1123721-1
			Loose	1318912-1

(Mfr:Tyco Electronics)

※ I/O Connector is Mfr. Tyco Electronics
※ Option:-J1:VH(J.S.T) connector type.

<PIN CONNECTION>

CN1

Pin No.	Input
1	AC(L)
2	
3	AC(N)
4	
5	FG

CN2

Pin No.	Output
1 to 4	-V
5 to 8	+V

※ Keep drawing current per pin below 5A for CN2.

※ Tolerance : ±1 [±0.04]
※ Weight : 280g max (with chassis & cover : 480g max)
※ PCB material : CEM3
※ Optional chassis and cover material : Electric galvanizing steel board.
※ Dimensions in mm, [ ]=inches
※ Mounting torque (Mounting hole of chassis) :1.5N・m (16kgf・cm) max

Connector type

CN4 Option (Mfr:J.S.T)

PIN No.	Contents
1	RC(+)
2	RC(-)

Barrier strip type

Model B2B-XH-A
Mating Connector (Terminal)
XHP-2
(BXH-001T-P0.6 or SXH-001T-P0.6)

COSEL AC-DC Power Supplies Open Frame/ Enclosed Type

LFA150F

Ordering information

LF	A	150	F	-□	-□
①	②	③	④	⑤	⑥

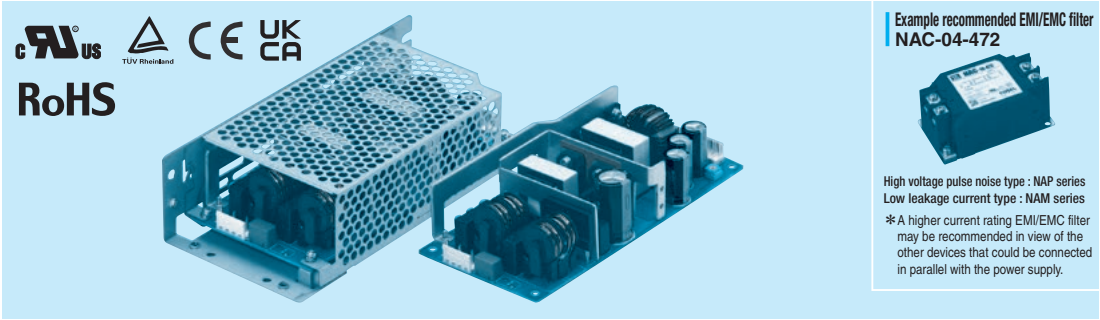

Example recommended EMI/EMC filter
NAC-04-472

High voltage pulse noise type : NAP series
Low leakage current type : NAM series

∗A higher current rating EMI/EMC filter may be recommended in view of the other devices that could be connected in parallel with the power supply.

①Series name
②Single output
③Output wattage
④Universal input
⑤Output voltage
⑥Optional ∗1
C : with Coating
G : Low leakage current
H : with the function to be acceptable to output peak current (only 24V)
J1 : VH(J.S.T.)connector type
R : with Remote ON/OFF
R2 : with Remote ON/OFF
S : with Chassis
SN : with Chassis & cover
Y : with Potentiometer
Please refer to Instruction manual 6.

This power supply is manufactured by SMD technology. The stress to P.C.B like twisting or bending causes the defect of the unit, so handle the unit with care.
∗Make sure necessary tests will be carried out on your end equipment with the power supply installed in accordance with any required EMC/EMI regulations.

MODEL	LFA150F-3R3-Y	LFA150F-5-Y	LFA150F-12	LFA150F-15	LFA150F-24	LFA150F-24-H	LFA150F-36	LFA150F-48
MAX OUTPUT WATTAGE[W] ∗5	99	150	150	150	151.2	151.2 (189.6)	151.2	153.6
DC OUTPUT ∗5	3.3V 30A	5V 30A	12V 12.5A	15V 10A	24V 6.3A	24V 6.3 (7.9)A	36V 4.2A	48V 3.2A

SPECIFICATIONS

	MODEL		LFA150F-3R3-Y	LFA150F-5-Y	LFA150F-12	LFA150F-15	LFA150F-24	LFA150F-24-H	LFA150F-36	LFA150F-48
INPUT	VOLTAGE[V]		AC85 - 264 1 ϕ (Refer to "Derating", Instruction Manual 1 and 3) ∗4							
	CURRENT[A]	ACIN 100V	1.4typ (Io=100%)	2.0typ (Io=100%)						
		ACIN 200V	0.7typ (Io=100%)	1.0typ (Io=100%)						
	FREQUENCY[Hz]		50 / 60 (47 - 63)							
	EFFICIENCY[%]	ACIN 100V	80.0typ	82.5typ	82.5typ	84.0typ	85.0typ	85.0typ	85.0typ	85.5typ
		ACIN 200V	82.0typ	85.5typ	85.0typ	86.5typ	87.5typ	87.5typ	87.5typ	88.0typ
	POWER FACTOR (Io=100%)	ACIN 100V	0.98typ	0.99typ						
		ACIN 200V	0.92typ	0.95typ						
	INRUSH CURRENT[A]	ACIN 100V	15typ (Io=100%) (At cold start) (Ta=25℃)							
		ACIN 200V	30typ (Io=100%) (At cold start) (Ta=25℃)							
	LEAKAGE CURRENT[mA]		0.40 / 0.75max (ACIN 100V / 240V 60Hz, Io=100%, According to IEC62368-1 and DEN-AN)							
OUTPUT	VOLTAGE[V]		3.3	5	12	15	24	24	36	48
	CURRENT[A] ∗5		30	30	12.5	10	6.3	6.3 (Peak 7.9)	4.2	3.2
	LINE REGULATION[mV] ∗7		20max	20max	48max	60max	96max	96max	144max	192max
	LOAD REGULATION[mV] ∗7		40max	40max	100max	120max	150max	150max	240max	240max
	RIPPLE[mVp-p]	0 to +40℃ ∗2	80max	80max	120max	120max	120max	240max	150max	150max
		-10 - 0℃ ∗2	140max	140max	160max	160max	160max	320max	200max	200max
	RIPPLE NOISE[mVp-p]	0 to +40℃ ∗2	120max	120max	150max	150max	150max	300max	250max	250max
		-10 - 0℃ ∗2	160max	160max	180max	180max	180max	360max	300max	300max
	TEMPERATURE REGULATION[mV]	0 to +40℃	50max	50max	120max	150max	240max	240max	360max	480max
		-10 to +40℃	60max	60max	150max	180max	290max	290max	450max	600max
	DRIFT[mV] ∗3		20max	20max	48max	60max	96max	96max	144max	192max
	START-UP TIME[ms]		350typ (ACIN 100V, Io=100%)							
	HOLD-UP TIME[ms]		20typ (ACIN 100V, Io=100%)							
	OUTPUT VOLTAGE ADJUSTMENT RANGE[V]		2.85 to 3.63	4.50 to 5.50	Fixed ("Y"option is available for adjusting output voltage)					
	OUTPUT VOLTAGE SETTING[V]		3.30 to 3.40	5.00 to 5.15	11.50 to 12.50	14.40 to 15.60	23.00 to 25.00	23.00 to 25.00	34.50 to 37.50	46.00 to 50.00
PROTECTION CIRCUIT AND OTHERS	OVERCURRENT PROTECTION		Works over 105% of rating (works over 101% of peak current at option -H) and recovers automatically							
	OVERVOLTAGE PROTECTION		4.00 to 5.25	5.75 to 7.00	13.80 to 16.80	17.25 to 21.00	27.60 to 33.60	27.60 to 33.60	41.40 to 50.40	55.20 to 67.20
	OPERATING INDICATION		Not provided							
	REMOTE SENSING		Not provided							
	REMOTE ON/OFF		Option (Refer to Instruction Manual)							
ISOLATION	INPUT-OUTPUT-RC ∗6		AC3,000V 1minute, Cutoff current = 10mA, DC500V 50MΩ min (At Room Temperature)							
	INPUT-FG		AC2,000V 1minute, Cutoff current = 10mA, DC500V 50MΩ min (At Room Temperature)							
	OUTPUT-RC-FG ∗6		AC500V 1minute, Cutoff current = 25mA, DC500V 50MΩ min (At Room Temperature)							
	OUTPUT-RC ∗6		AC100V 1minute, Cutoff current = 25mA, DC100V 10MΩ min (At Room Temperature)							
ENVIRONMENT	OPERATING TEMP.,HUMID.AND ALTITUDE ∗4		-10 to +70℃, 20 - 90%RH (Non condensing) (Refer to "Derating", Instruction Manual 3), 3,000m (10,000feet) max							
	STORAGE TEMP.,HUMID.AND ALTITUDE		-20 to +75℃, 20 - 90%RH (Non condensing), 9,000m (30,000feet) max							
	VIBRATION		10 - 55Hz, 19.6m/s² (2G), 3minutes period, 60minutes each along X, Y and Z axis							
	IMPACT		196.1m/s² (20G), 11ms, once each X, Y and Z axis							
SAFETY AND NOISE REGULATIONS	AGENCY APPROVALS		UL60950-1, C-UL (CSA60950-1), EN62368-1 Complies with DEN-AN							
	CONDUCTED NOISE		Complies with FCC-B, VCCI-B, CISPR-B, EN55011-B, EN55022-B							
	HARMONIC ATTENUATOR		Complies with IEC61000-3-2 (Class A) ∗8							
OTHERS	CASE SIZE/WEIGHT		75×37.0×160mm [2.95×1.46×6.30 inches] (W×H×D) / 390g max (with chassis & cover : 650g max)							
	COOLING METHOD		Convection (Refer to "Derating", Instruction Manual 3) ∗4							

∗1 Specification is changeed at option, refer to Instruction Manual.
∗2 This is the value that measured on measuring board with capacitor of 22μF at 150mm from output terminal. Measured by 20MHz oscilloscope or Ripple-Noise meter (Equivalent to KEISOKU-GIKEN: RM103).
∗3 Drift is the change in DC output for an eight hour period after a half-hour warm-up at 25℃, with the input voltage held constant at the rated input/output.
∗4 Derating is required.
∗5 ( ) means peak current. There is a possibility that an internal device is damaged when the specification is exceeded. Please contact us about the detail.
∗6 Applicable when remote control (optional) is added.
∗7 Please contact us about dynamic load and input response.
∗8 Please contact us about another class.
∗ To meet the specifications. Do not operate over-loaded condition.
∗ Parallel operation is not possible.
∗ Derating is required when operated with chassis and cover.
∗ Sound noise may be generated by power supply in case of pulse load.

Block diagram

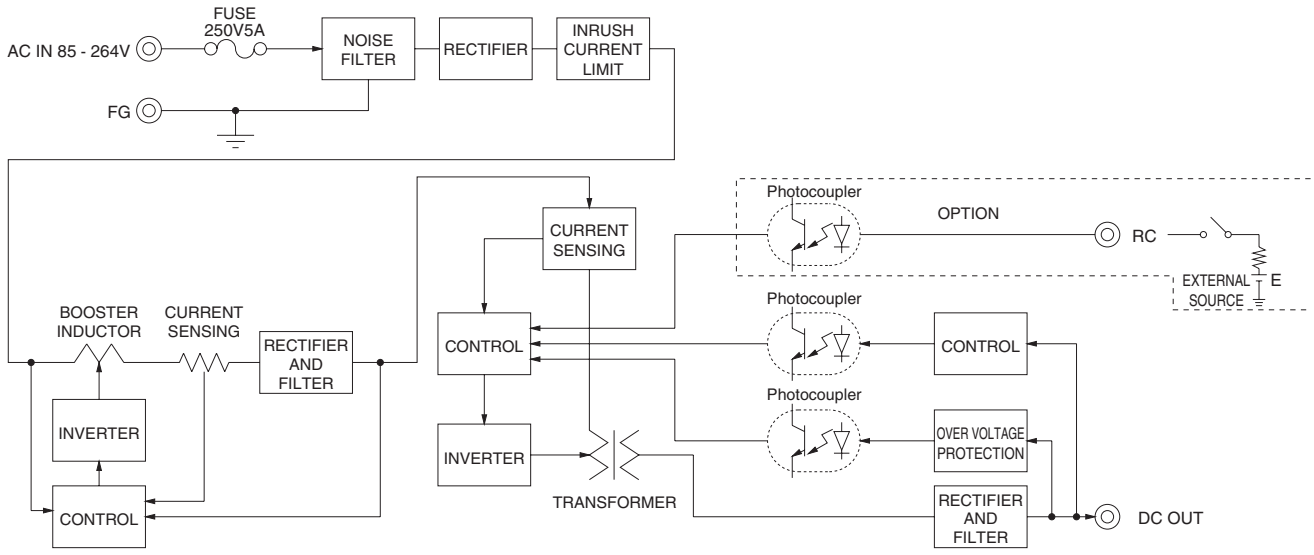

External view

※ External size of option is different from standard model.

Standard type

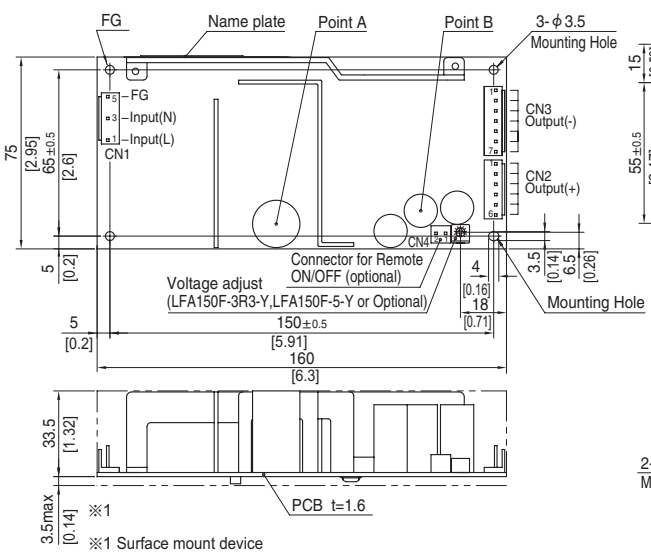

※1 Surface mount device

Chassis and cover type

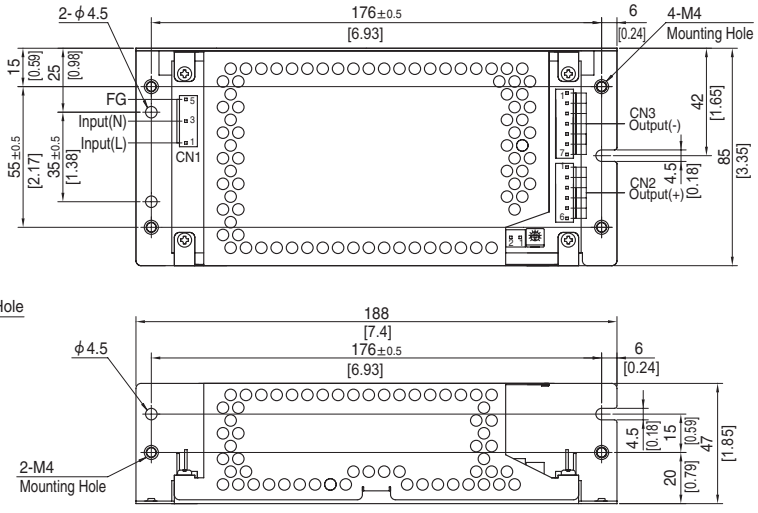

※ 4 Mounting holes are existing.
※ The back side of P.C.B. of the power supply is assembled some SMDs.
Be attention not to bump against the attached area by vibration.
※ Use the spacer of 8mm length or more regarding insulation.
And do not use press-fitting bush.
※ Point A, Point B are thermometry points. Please refer to Instruction Manual 3.

I/O Connector		Mating connector	Terminal	
CN1	1-1123724-3	1-1123722-5	Chain	1123721-1
			Loose	1318912-1
CN2	1-1123723-6	1-1123722-6	Chain	1123721-1
			Loose	1318912-1
CN3	1-1123723-7	1-1123722-7	Chain	1123721-1
			Loose	1318912-1

(Mfr:Tyco Electronics)

※ I/O Connector is Mfr. Tyco Electronics
※ Option:-J1:VH(J.S.T) connector type.

<PIN CONNECTION>

CN1

Pin No.	Input
1	AC(L)
2	
3	AC(N)
4	
5	FG

CN2

Pin No.	Output
1 to 6	+V

CN3

Pin No.	Output
1 to 7	-V

※ Keep drawing current per pin below 5A for CN2,CN3.

※ Tolerance : ±1 [±0.04]
※ Weight : 390g max (with chassis & cover : 650g max)
※ PCB material : CEM3
※ Optional chassis and cover material : Electric galvanizing steel board.
※ Dimensions in mm, [ ]=inches
※ Mounting torque (Mounting hole of chassis) :1.5N・m (16kgf・cm) max

Connector type

CN4 Option (Mfr:J.S.T)

PIN No.	Contents
1	RC(+)
2	RC(-)

Barrier strip type

Model B2B-XH-A
Mating Connector (Terminal)
XHP-2
(BXH-001T-P0.6 or SXH-001T-P0.6)

COSEL AC-DC Power Supplies Open Frame/ Enclosed Type

LFA240F

Ordering information

LF	A	240	F	-□	-□
①	②	③	④	⑤	⑥

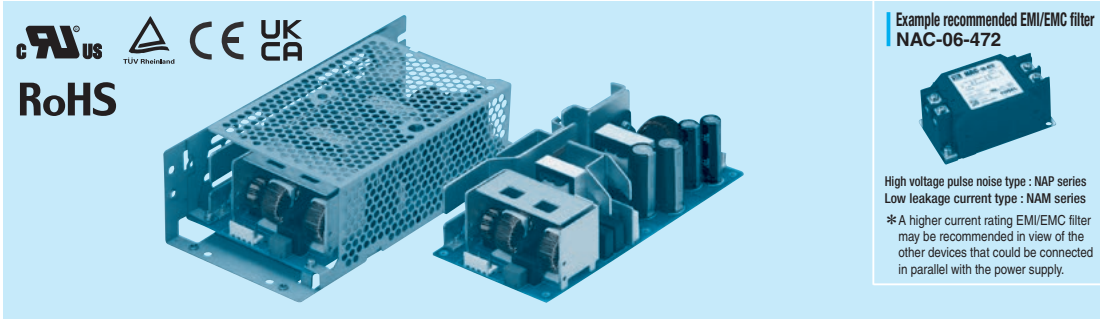

Example recommended EMI/EMC filter
NAC-06-472

High voltage pulse noise type : NAP series
Low leakage current type : NAM series

＊A higher current rating EMI/EMC filter may be recommended in view of the other devices that could be connected in parallel with the power supply.

①Series name
②Single output
③Output wattage
④Universal input
⑤Output voltage
⑥Optional ＊1
C : with Coating
G : Low leakage current
H : with the function to be acceptable to output peak current (only 24V)
J1 : VH(J.S.T.)connector type
R : with Remote ON/OFF
R2 : with Remote ON/OFF
S : with Chassis
SN : with Chassis & cover
T : Vertical terminal block
Y : with Potentiometer

Please refer to Instruction manual 6.

This power supply is manufactured by SMD technology. The stress to P.C.B like twisting or bending causes the defect of the unit, so handle the unit with care.
＊Make sure necessary tests will be carried out on your end equipment with the power supply installed in accordance with any required EMC/EMI regulations.

MODEL	LFA240F-24	LFA240F-24-H	LFA240F-36	LFA240F-48
MAX OUTPUT WATTAGE[W] ＊5	240	240 (300)	241.2	240
DC OUTPUT ＊5	24V 10A	24V 10 (12.5)A	36V 6.7A	48V 5A

SPECIFICATIONS

	MODEL		LFA240F-24	LFA240F-24-H	LFA240F-36	LFA240F-48
INPUT	VOLTAGE[V]		AC85 - 264 1ϕ (Refer to "Derating", Instruction Manual 1 and 3) ＊4			
	CURRENT[A]	ACIN 100V	3.3typ (Io=100%)			
		ACIN 200V	1.7typ (Io=100%)			
	FREQUENCY[Hz]		50 / 60 (47 - 63)			
	EFFICIENCY[%]	ACIN 100V	84.5typ	84.5typ	84.5typ	84.5typ
		ACIN 200V	87.5typ	87.5typ	87.5typ	87.5typ
	POWER FACTOR (Io=100%)	ACIN 100V	0.99typ			
		ACIN 200V	0.95typ			
	INRUSH CURRENT[A]	ACIN 100V	15 / 30typ (Io=100%) (Primary inrush current /Secondary inrush current) (More than 3 sec. to re-start)			
		ACIN 200V	30 / 30typ (Io=100%) (Primary inrush current /Secondary inrush current) (More than 3 sec. to re-start)			
	LEAKAGE CURRENT[mA]		0.40 / 0.75max (ACIN 100V / 240V 60Hz, Io=100%, According to IEC62368-1 and DEN-AN)			
OUTPUT	VOLTAGE[V]		24	24	36	48
	CURRENT[A] ＊5		10	10 (Peak12.5)	6.7	5
	LINE REGULATION[mV] ＊7		96max	96max	144max	192max
	LOAD REGULATION[mV] ＊7		150max	150max	240max	240max
	RIPPLE[mVp-p]	0 to +40℃ ＊2	120max	240max	150max	150max
		-10 - 0℃ ＊2	160max	320max	200max	200max
	RIPPLE NOISE[mVp-p]	0 to +40℃ ＊2	150max	300max	250max	250max
		-10 - 0℃ ＊2	180max	360max	300max	300max
	TEMPERATURE REGULATION[mV]	0 to +40℃	240max	240max	360max	480max
		-10 to +40℃	290max	290max	450max	600max
	DRIFT[mV] ＊3		96max	96max	144max	192max
	START-UP TIME[ms]		350typ (ACIN 100V, Io=100%)			
	HOLD-UP TIME[ms]		20typ (ACIN 100V, Io=100%)			
	OUTPUT VOLTAGE ADJUSTMENT RANGE[V]		Fixed ("Y"option is available for adjusting output voltage)			
	OUTPUT VOLTAGE SETTING[V]		23.00 to 25.00	23.00 to 25.00	34.50 to 37.50	46.00 to 50.00
PROTECTION CIRCUIT AND OTHERS	OVERCURRENT PROTECTION		Works over 105% of rating (works over 101% of peak current at option -H) and recovers automatically			
	OVERVOLTAGE PROTECTION		27.60 to 33.60	27.60 to 33.60	41.40 to 50.40	55.20 to 67.20
	OPERATING INDICATION		Not provided			
	REMOTE SENSING		Not provided			
	REMOTE ON/OFF		Option (Refer to Instruction Manual)			
ISOLATION	INPUT-OUTPUT-RC ＊6		AC3,000V 1minute, Cutoff current = 10mA, DC500V 50MΩ min (At Room Temperature)			
	INPUT-FG		AC2,000V 1minute, Cutoff current = 10mA, DC500V 50MΩ min (At Room Temperature)			
	OUTPUT-RC-FG ＊6		AC500V 1minute, Cutoff current = 25mA, DC500V 50MΩ min (At Room Temperature)			
	OUTPUT-RC ＊6		AC100V 1minute, Cutoff current = 25mA, DC100V 10MΩ min (At Room Temperature)			
ENVIRONMENT	OPERATING TEMP.,HUMID.AND ALTITUDE ＊4		-10 to +70℃, 20 - 90%RH (Non condensing) (Refer to "Derating", Instruction Manual 3), 3,000m (10,000feet) max			
	STORAGE TEMP.,HUMID.AND ALTITUDE		-20 to +75℃, 20 - 90%RH (Non condensing), 9,000m (30,000feet) max			
	VIBRATION		10 - 55Hz, 19.6m/s² (2G), 3minutes period, 60minutes each along X, Y and Z axis			
	IMPACT		196.1m/s² (20G), 11ms, once each X, Y and Z axis			
SAFETY AND NOISE REGULATIONS	AGENCY APPROVALS		UL60950-1, C-UL (CSA60950-1), EN62368-1 Complies with DEN-AN			
	CONDUCTED NOISE		Complies with FCC-B, VCCI-B, CISPR-B, EN55011-B, EN55022-B			
	HARMONIC ATTENUATOR		Complies with IEC61000-3-2 (Class A) ＊8			
OTHERS	CASE SIZE/WEIGHT		84×46.5×180mm [3.31×1.83×7.09 inches] (W×H×D) / 550g max (with chassis & cover : 880g max)			
	COOLING METHOD		Convection (Refer to "Derating", Instruction Manual 3) ＊4			

＊1 Specification is changeed at option, refer to Instruction Manual.
＊2 This is the value that measured on measuring board with capacitor of 22μF at 150mm from output terminal. Measured by 20MHz oscilloscope or Ripple-Noise meter (Equivalent to KEISOKU-GIKEN: RM103).
＊3 Drift is the change in DC output for an eight hour period after a half-hour warm-up at 25℃, with the input voltage held constant at the rated input/output.
＊4 Derating is required.
＊5 ( ) means peak current. There is a possibility that an internal device is damaged when the specification is exceeded. Please contact us about the detail.
＊6 Applicable when remote control (optional) is added.
＊7 Please contact us about dynamic load and input response.
＊8 Please contact us about another class.
＊ To meet the specifications. Do not operate over-loaded condition.
＊ Parallel operation is not possible.
＊ Derating is required when operated with chassis and cover.
＊ Sound noise may be generated by power supply in case of pulse load.

Block diagram

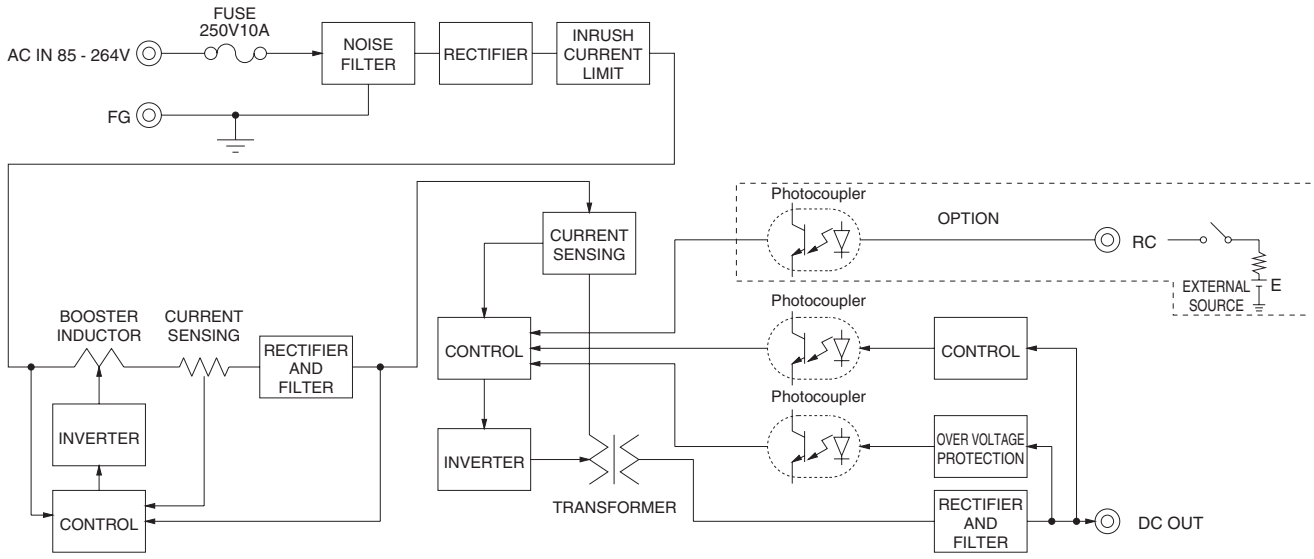

External view

※ External size of option is different from standard model.

Standard type

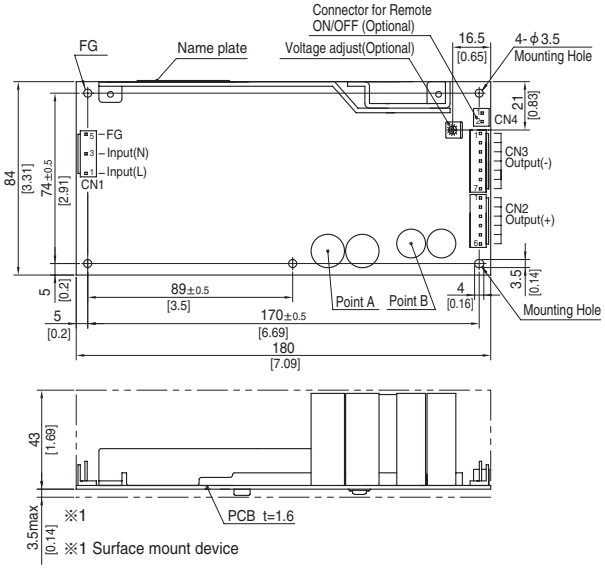

※1 Surface mount device

Chassis and cover type

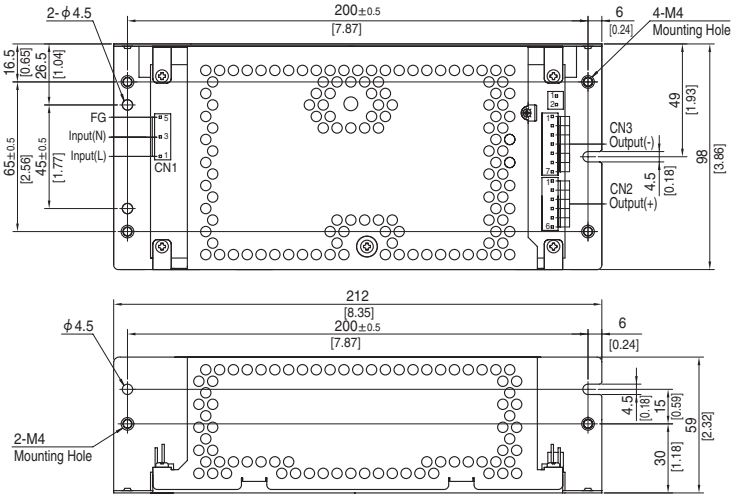

※ 5 Mounting holes are existing.
※ The back side of P.C.B. of the power supply is assembled some SMDs.
Be attention not to bump against the attached area by vibration.
※ Use the spacer of 8mm length or more regarding insulation.
And do not use press-fitting bush.
※ Point A, Point B are thermometry points. Please refer to Instruction Manual 3.

I/O Connector		Mating connector	Terminal	
CN1	1-1123724-3	1-1123722-5	Chain	1123721-1
			Loose	1318912-1
CN2	1-1123723-6	1-1123722-6	Chain	1123721-1
			Loose	1318912-1
CN3	1-1123723-7	1-1123722-7	Chain	1123721-1
			Loose	1318912-1

(Mfr:Tyco Electronics)

※ I/O Connector is Mfr. Tyco Electronics
※ Option:-J1:VH(J.S.T) connector type.

<PIN CONNECTION>

CN1

Pin No.	Input
1	AC(L)
2	
3	AC(N)
4	
5	FG

CN2

Pin No.	Output
1 to 6	+V

CN3

Pin No.	Output
1 to 7	-V

※ Keep drawing current per pin below 5A for CN2,CN3.

※ Tolerance : ±1 [±0.04]
※ Weight : 550g max (with chassis & cover : 880g max)
※ PCB material : CEM3
※ Optional chassis and cover material : Electric galvanizing steel board.
※ Dimensions in mm, [ ]=inches
※ Mounting torque (Mounting hole of chassis) :1.5N・m (16kgf・cm) max

Connector type

CN4 Option (Mfr:J.S.T)

PIN No.	Contents
1	RC(+)
2	RC(-)

Barrier strip type

Model B2B-XH-A
Mating Connector (Terminal)
XHP-2
(BXH-001T-P0.6 or SXH-001T-P0.6)

COSEL AC-DC Power Supplies Open Frame/ Enclosed Type

LFA300F

Ordering information

LF	A	300	F	-□	-□
①	②	③	④	⑤	⑥

RoHS

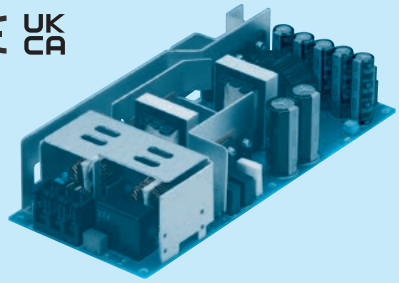

Example recommended EMI/EMC filter
NAC-06-472

High voltage pulse noise type : NAP series
Low leakage current type : NAM series

＊A higher current rating EMI/EMC filter may be recommended in view of the other devices that could be connected in parallel with the power supply.

①Series name
②Single output
③Output wattage
④Universal input
⑤Output voltage
⑥Optional ＊1
C : with Coating
G : Low leakage current
H : with the function to be acceptable to output peak current (Only 24V, 30V, 36V and 48V)
J : EP (Tyco Electronics) connector type (Except 3.3V and 5V)
J1 : VH (J.S.T.) connector type (Except 3.3V and 5V)
R : with Remote ON/OFF
R2 : with Remote ON/OFF
S : with Chassis
SNF : with Chassis & cover & fan (Only 5V, 12V and 24V)
T1 : Holizontal terminal block

Please refer to Instruction manual 6.

This power supply is manufactured by SMD technology. The stress to P.C.B like twisting or bending causes the defect of the unit, so handle the unit with care.
＊Make sure necessary tests will be carried out on your end equipment with the power supply installed in accordance with any required EMC/EMI regulations.

MODEL		LFA300F-3R3-TY	LFA300F-5-TY	LFA300F-12-TY	LFA300F-15-TY	LFA300F-24-TY	LFA300F-24-HTY	LFA300F-30-TY	LFA300F-36-TY	LFA300F-48-TY
MAX OUTPUT WATTAGE[W] ＊5		198	300	324	330	336	336 (456)	330	338.4	336
DC OUTPUT ＊5	Convection	3.3V 40A	5V 40A	12V 17A	15V 14A	24V 12.5A	24V 12.5 (19)A	30V 10A	36V 8.4A	48V 6.3A
	Forced air	3.3V 60A	5V 60A	12V 27A	15V 22A	24V 14A	24V 14 (19)A	30V 11A	36V 9.4A	48V 7A

SPECIFICATIONS

	MODEL		LFA300F-3R3-TY	LFA300F-5-TY	LFA300F-12-TY	LFA300F-15-TY	LFA300F-24-TY	LFA300F-24-HTY	LFA300F-30-TY	LFA300F-36-TY	LFA300F-48-TY
INPUT	VOLTAGE[V]		AC85 - 264 1 ϕ (Refer to "Derating", Instruction Manual 1 and 3) ＊4								
	CURRENT[A]	ACIN 100V	2.7typ (Io=100%)	4.1typ (Io=100%)							
		ACIN 200V	1.4typ (Io=100%)	2.0typ (Io=100%)							
	FREQUENCY[Hz]		50 / 60 (47 - 63)								
	EFFICIENCY[%]	ACIN 100V	75.0typ	79.0typ	80.0typ	81.5typ	85.0typ	85.0typ	85.5typ	85.5typ	85.5typ
		ACIN 200V	77.0typ	82.5typ	83.0typ	84.5typ	88.0typ	88.0typ	88.0typ	88.0typ	88.0typ
	POWER FACTOR (Io=100%)	ACIN 100V	0.98typ	0.99typ							
		ACIN 200V	0.92typ	0.95typ							
	INRUSH CURRENT[A]	ACIN 100V	15 / 30typ (Io=100%) (Primary inrush current /Secondary inrush current) (More than 3 sec. to re-start)								
		ACIN 200V	30 / 30typ (Io=100%) (Primary inrush current /Secondary inrush current) (More than 3 sec. to re-start)								
	LEAKAGE CURRENT[mA]		0.45 / 0.75max (ACIN 100V / 240V 60Hz, Io=100%, According to IEC62368-1 and DEN-AN)								
OUTPUT	VOLTAGE[V]		3.3	5	12	15	24	24	30	36	48
	CURRENT[A] ＊5	Convection	40	40	17	14	12.5	12.5 (Peak19)	10	8.4	6.3
		Forced air	60	60	27	22	14	14 (Peak19)	11	9.4	7
	LINE REGULATION[mV] ＊7		20max	20max	48max	60max	96max	96max	144max	144max	192max
	LOAD REGULATION[mV] ＊7		40max	40max	100max	120max	150max	150max	240max	240max	240max
	RIPPLE[mVp-p]	0 to +40℃ ＊2	80max	80max	120max	120max	120max	240max	150max	150max	150max
		-10 - 0℃ ＊2	140max	140max	160max	160max	160max	320max	200max	200max	200max
	RIPPLE NOISE[mVp-p]	0 to +40℃ ＊2	120max	120max	150max	150max	150max	300max	250max	250max	250max
		-10 - 0℃ ＊2	160max	160max	180max	180max	180max	360max	300max	300max	300max
	TEMPERATURE REGULATION[mV]	0 to +40℃	50max	50max	120max	150max	240max	240max	360max	360max	480max
		-10 to +40℃	60max	60max	150max	180max	290max	290max	450max	450max	600max
	DRIFT[mV] ＊3		20max	20max	48max	60max	96max	96max	144max	144max	192max
	START-UP TIME[ms]		350typ (ACIN 100V, Io=100%)								
	HOLD-UP TIME[ms]		20typ (ACIN 100V, Io=100%)								
	OUTPUT VOLTAGE ADJUSTMENT RANGE[V]		2.85 to 3.63	4.50 to 5.50	10.80 to 13.20	13.50 to 16.50	21.60 to 27.50	21.60 to 27.50	27.00 to 33.00	32.40 to 39.60	39.60 to 52.80
	OUTPUT VOLTAGE SETTING[V]		3.30 to 3.40	5.00 to 5.15	12.00 to 12.48	15.00 to 15.60	24.00 to 24.96	24.00 to 24.96	30.00 to 31.20	36.00 to 37.44	48.00 to 49.92
PROTECTION CIRCUIT AND OTHERS	OVERCURRENT PROTECTION		Works over 105% of rating (works over 101% of peak current at option -H) and recovers automatically								
	OVERVOLTAGE PROTECTION		4.00 to 5.25	5.75 to 7.00	13.80 to 16.80	17.25 to 21.00	27.60 to 33.60	27.60 to 33.60	34.50 to 42.00	41.40 to 50.40	55.20 to 67.20
	OPERATING INDICATION		Not provided								
	REMOTE SENSING		Not provided								
	REMOTE ON/OFF		Option (Refer to Instruction Manual)								
ISOLATION	INPUT-OUTPUT·RC ＊6		AC3,000V 1minute, Cutoff current = 10mA, DC500V 50MΩ min (At Room Temperature)								
	INPUT-FG		AC2,000V 1minute, Cutoff current = 10mA, DC500V 50MΩ min (At Room Temperature)								
	OUTPUT·RC-FG ＊6		AC500V 1minute, Cutoff current = 25mA, DC500V 50MΩ min (At Room Temperature)								
	OUTPUT-RC ＊6		AC100V 1minute, Cutoff current = 25mA, DC100V 10MΩ min (At Room Temperature)								
ENVIRONMENT	OPERATING TEMP.,HUMID.AND ALTITUDE ＊4		-10 to +70℃, 20 - 90%RH (Non condensing) (Refer to "Derating", Instruction Manual 3), 3,000m (10,000feet) max								
	STORAGE TEMP.,HUMID.AND ALTITUDE		-20 to +75℃, 20 - 90%RH (Non condensing), 9,000m (30,000feet) max								
	VIBRATION		10 - 55Hz, 19.6m/s² (2G), 3minutes period, 60minutes each along X, Y and Z axis								
	IMPACT		196.1m/s² (20G), 11ms, once each X, Y and Z axis								
SAFETY AND NOISE REGULATIONS	AGENCY APPROVALS		UL60950-1, C-UL (CSA60950-1), EN62368-1 Complies with DEN-AN								
	CONDUCTED NOISE		Complies with FCC-B, VCCI-B, CISPR-B, EN55011-B, EN55022-B								
	HARMONIC ATTENUATOR		Complies with IEC61000-3-2 (Class A) ＊8								
OTHERS	CASE SIZE/WEIGHT		95×52.5×222mm [3.74×2.07×8.74 inches] (W×H×D) (without terminal block) / 810g max (with chassis & cover : 1,270g max)								
	COOLING METHOD		Convection / Forced air (Refer to "Derating", Instruction Manual 3) ＊4								

＊1 Specification is changeed at option, refer to Instruction Manual.
＊2 This is the value that measured on measuring board with capacitor of 22μF at 150mm from output terminal. Measured by 20MHz oscilloscope or Ripple-Noise meter (Equivalent to KEISOKU-GIKEN: RM103).
＊3 Drift is the change in DC output for an eight hour period after a half-hour warm-up at 25℃, with the input voltage held constant at the rated input/output.
＊4 Derating is required.
＊5 ( ) means peak current. There is a possibility that an internal device is damaged when the specification is exceeded. Please contact us about the detail.
＊6 Applicable when remote control (optional) is added.
＊7 Please contact us about dynamic load and input response.
＊8 Please contact us about another class.
＊ To meet the specifications. Do not operate over-loaded condition.
＊ Parallel operation is not possible.
＊ Derating is required when operated with chassis and cover.
＊ Sound noise may be generated by power supply in case of pulse load.

Block diagram

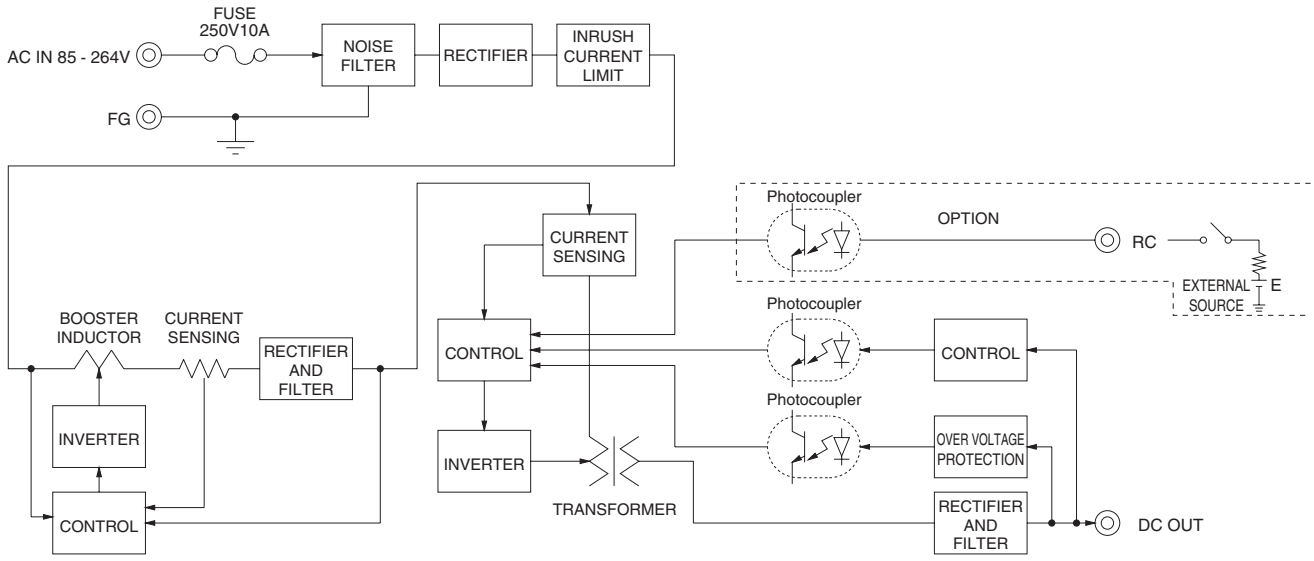

External view

※ External size of option is different from standard model.

Standard type

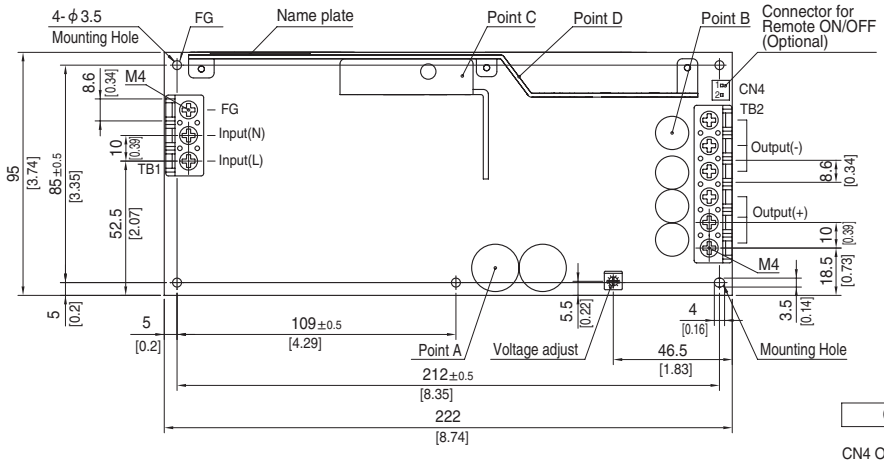

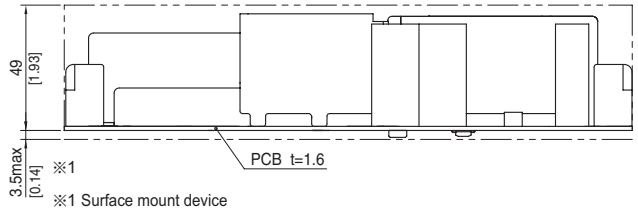

※1 Surface mount device

Connector type

CN4 Option (Mfr:J.S.T)

PIN No.	Contents
1	RC(+)
2	RC(-)

Barrier strip type

Model B2B-XH-A
Mating Connector (Terminal)
XHP-2
(BXH-001T-P0.6 or SXH-001T-P0.6)

※ 5 Mounting holes are existing.
※ The back side of P.C.B. of the power supply is assembled some SMDs.
Be attention not to bump against the attached area by vibration.
※ Use the spacer of 8mm length or more regarding insulation.
And do not use press-fitting bush.
※ Point A, Point B, Point C, Point D are thermometry points.
Please refer to Instruction Manual 3.
※ Keep drawing current per pin below 20A for TB2.

※ Tolerance : ±1 [±0.04]
※ Weight : 810g max (with chassis & cover : 1,270g max)
※ PCB material : CEM3
※ Dimensions in mm, [ ]=inches
※ Screw tightening torque : M4 1.6N・m (16.9kgf・cm) max

Assembling and Installation Method

Installation method

■This power supply is manufactured by SMD technology.The stress to P.C.B like twisting or bending causes the defect of the unit, so handle the unit with care.

■In case of metal chassis, keep the distance between d1 & d2 for to insulate between lead of component and metal chassis, use the spacer of 8mm or more between d1. If it is less than d1 & d2, insert the insulation sheet between power supply and metal chassis.

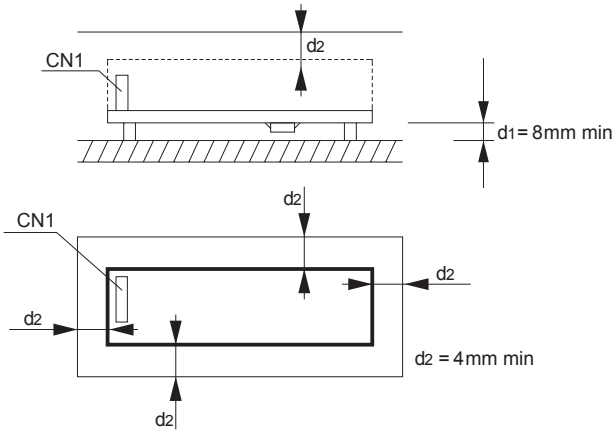

■There is a possibility that it is not possible to cool enough when the power supply is used by the sealing up space as showing in right figure.Please use it after confi rming the temperature of point A and point B of Instruction Manual 3.

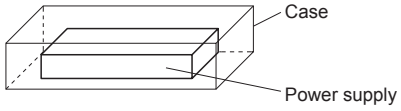

■(F) mounting is not possible when unit is with case cover, but if need to operate unit by (F) positioning with case cover, temperature / load derating is necessary. For more details, please contact our sales or engineering departments.

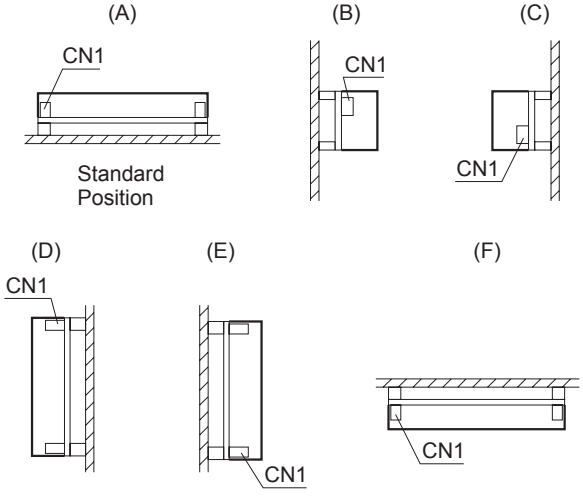

Mounting screw

■The mounting screw should be M3. The hatched area shows the allowance of metal parts for mounting.

● LFA10F, LFA15F

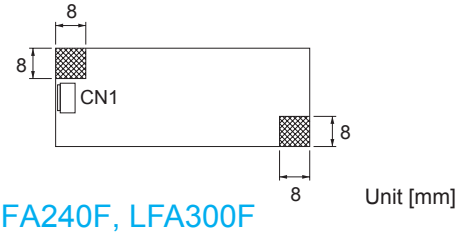

● LFA30F, LFA50F, LFA75F, LFA100F, LFA150F

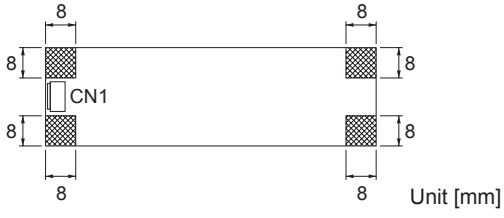

● LFA240F, LFA300F

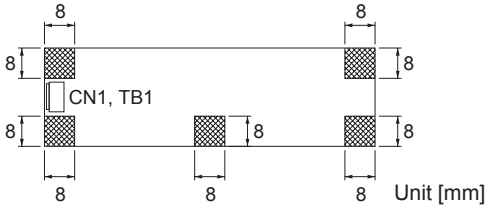

■If metallic fi ttings are used on the component side of the board,ensure there is no contact with surface mounted components.

■This product uses SMD technology.Please avoid the PCB installation method which includes the twisting stress or the bending stress.
*Recommendation to electrically connect FG to metal chassis for reducing noise.

Derating

●Derating curve for input voltage

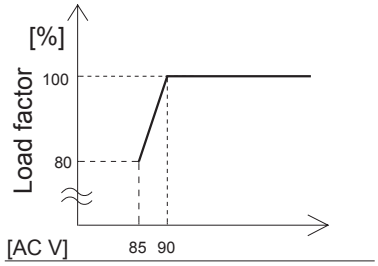

●LFA10F Ambient temperature derating curve (Reference value)

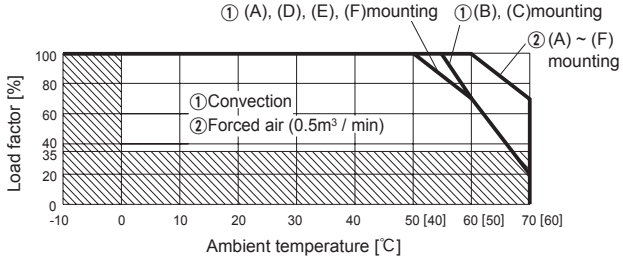

＊ Inside[ ] is with case cover

●LFA15F Ambient temperature derating curve (Reference value)

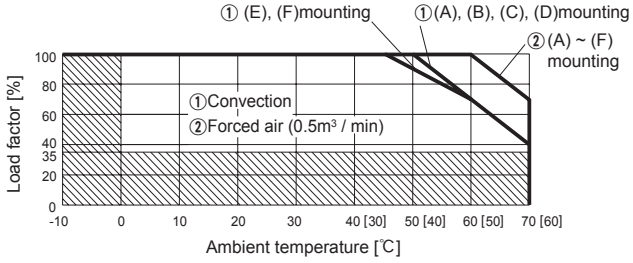

＊ Inside[ ] is with case cover

●LFA30F Ambient temperature derating curve (Reference value)

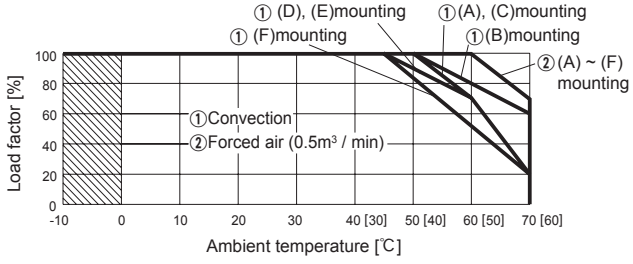

＊ Inside[ ] is with case cover

●LFA50F Ambient temperature derating curve (Reference value)

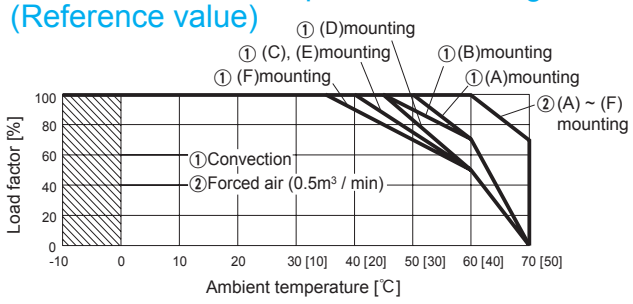

＊ Inside[ ] is with case cover

●LFA75F Ambient temperature derating curve (Reference value)

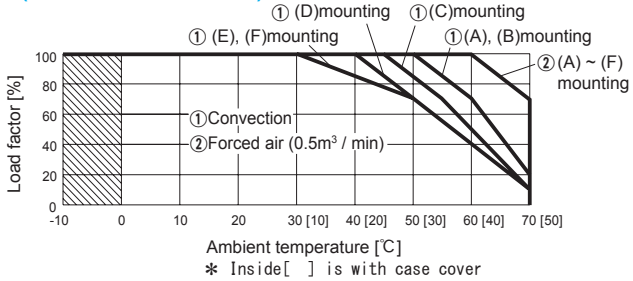

＊ Inside[ ] is with case cover

●LFA100F Ambient temperature derating curve (Reference value)

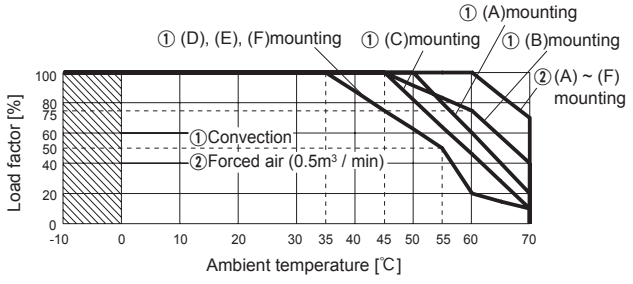

●LFA100F-□-SN Ambient temperature derating curve (Reference value)

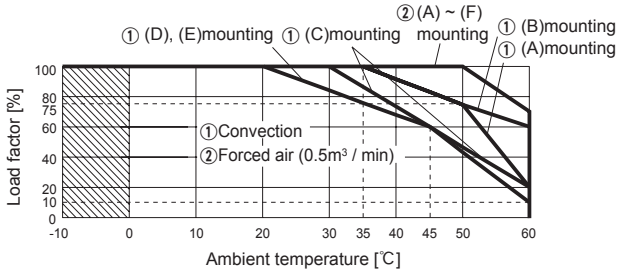

Derating

●LFA150F Ambient temperature derating curve (Reference value)

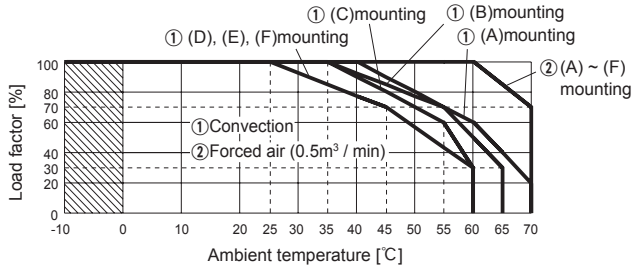

●LFA150F-□-SN Ambient temperature derating curve (Reference value)

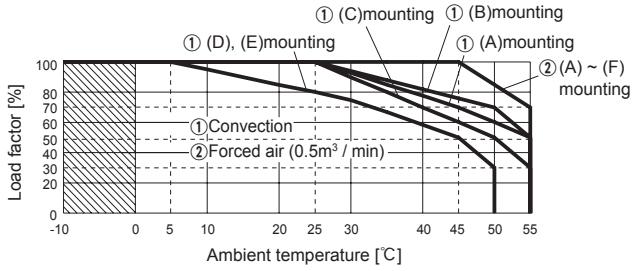

●LFA240F Ambient temperature derating curve (Reference value)

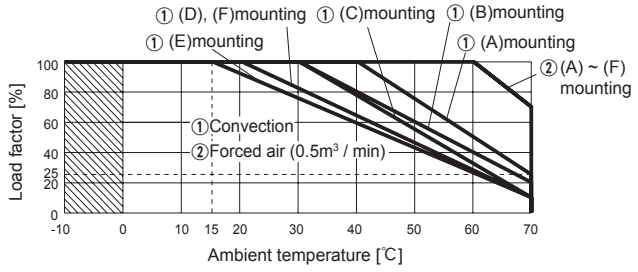

●LFA240F-□-SN Ambient temperature derating curve (Reference value)

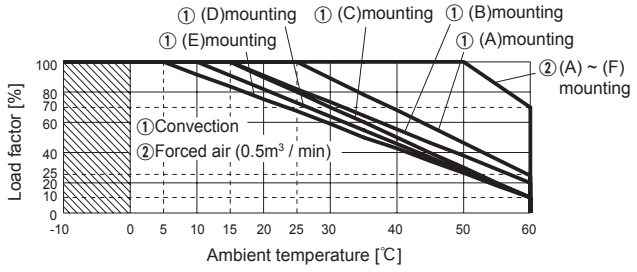

●LFA300F Ambient temperature derating curve (Reference value)

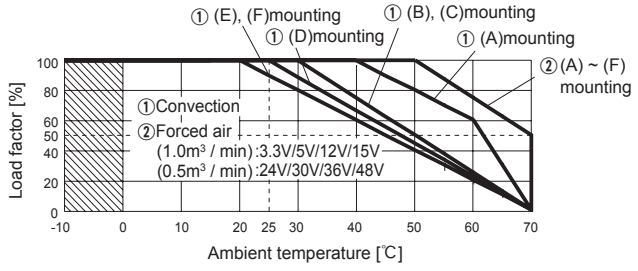

Output voltage	Output power[W]	
	①Convection	②Forced air
3.3V	132.0	198.0
5V	200.0	300.0
12V	204.0	324.0
15V	210.0	330.0
24V	300.0	336.0
30V	300.0	330.0
36V	302.4	338.4
48V	302.4	336.0

■The operative ambient temperature is different by with / without chassis cover or mounting position.
Note: In the hatched area, the specification of Ripple, Ripple Noise is different from other area.

■Make sure the temperature at point A and point B is less than the temperatures shown in Instruction Manual 3.

■The ambient temperature should be measured 5 to 10 cm away from the power supply so that it won't be influenced by the heat from the power supply. Please consult us for more details.

Instruction Manual

◆ It is neccessary to read the "Instruction Manual" and "Before using our product" before you use our product.

Basic Characteristics Data

Model	Circuit method	Switching frequency [kHz]	Input current ＊1 [A]	Inrush current protection	PCB/Pattern			Series/Parallel operation availability ＊2	
					Material	Single sided	Double sided	Series operation	Parallel operation
LFA10F	Flyback converter	100	0.26	LF	CEM-3	Yes		Yes	No
LFA15F	Flyback converter	100	0.35	Thermistor	CEM-3	Yes		Yes	No
LFA30F	Flyback converter	130	0.65	Thermistor	CEM-3	Yes		Yes	No
LFA50F	Active filter	60-440	0.67	Thermistor	CEM-3	Yes		Yes	No
	Flyback converter	130							
LFA75F	Active filter	60-440	1.0	Thermistor	CEM-3	Yes		Yes	No
	Flyback converter	130							
LFA100F	Active filter	60	1.3	Thermistor	CEM-3		Yes	Yes	No
	Forward converter	140							
LFA150F	Active filter	60	2.0	Thermistor	CEM-3		Yes	Yes	No
	Forward converter	140							
LFA240F	Active filter	60	3.3	SCR	CEM-3		Yes	Yes	No
	Forward converter	140							
LFA300F	Active filter	60	4.1	SCR	CEM-3		Yes	Yes	No
	Forward converter	140							

＊1 The value of input current is at ACIN 100V and rated load.
＊2 Refer to Instruction Manual 2.