DC-DC Converters PCB Mount Value-added Type

Isolated OCP OVP Remote ON/OFF Wide 4 :1 input

STMG-series

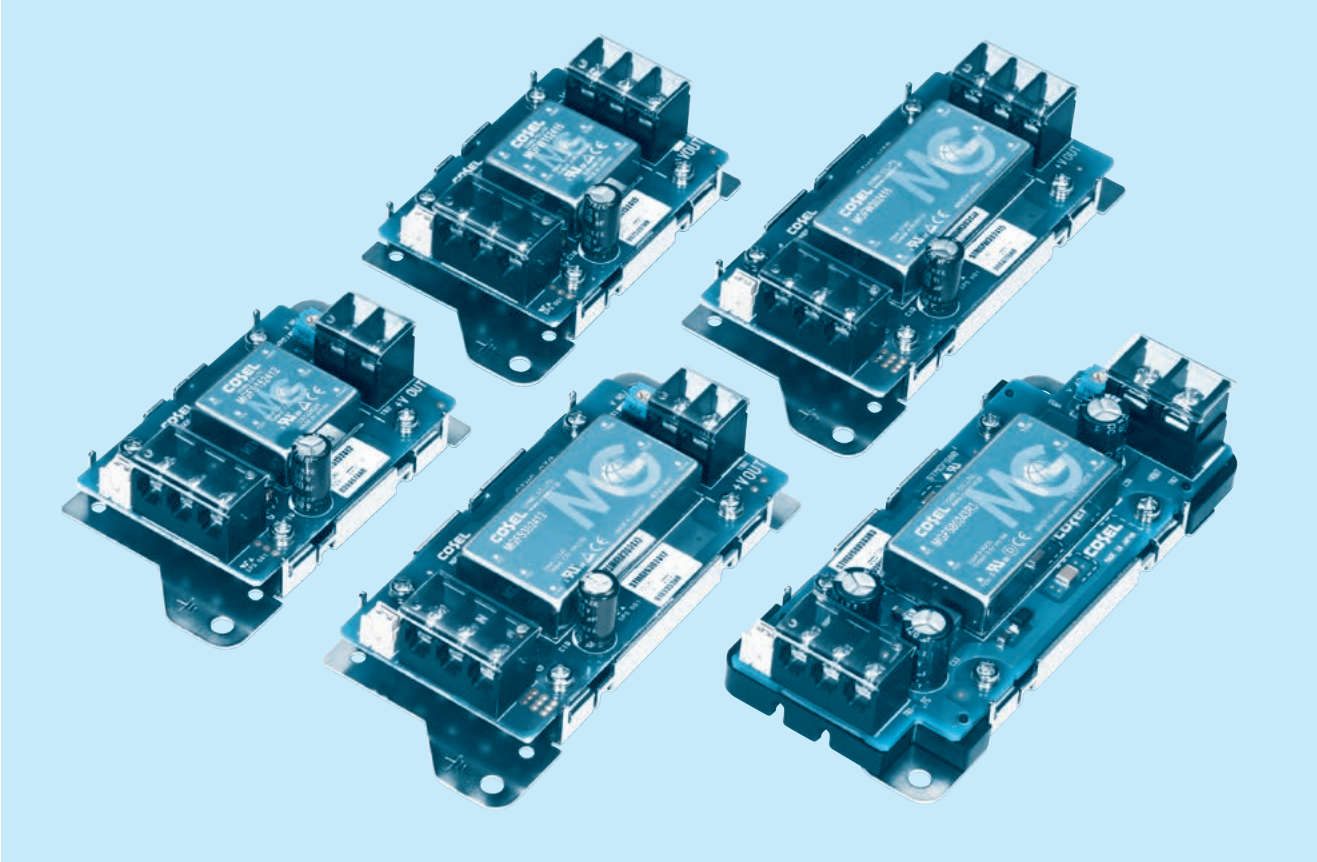

Feature

Isolated unit type DC-DC converter
Wide input voltage DC9-36V/DC18-76V
Various lineups
Available connector interface (option)
Available case cover (option)
Available DIN rail attachment (option)
Built in Overcurrent protection (recovery automatically)
Built in Overvoltage protection (STMG30/STMG80)
Built in Remote ON/OFF
Built in Output voltage adjustment (for single output, ±10%)

Safety agency approvals

UL60950-1 C-UL EN62368-1 Complies (STMG15/STMG30)
UL62368-1 C-UL EN62368-1 Complies (STMG80)

CE marking

Low voltage Directive
RoHS Directive

UKCA marking

Electrical Equipment Safety Regulations
RoHS Regulations

5-year warranty (refer to Instruction Manual)

COSEL DC-DC Converters PCB Mount Value-added Type

STMGFS15

Ordering information

STMGF	S	15	24	05	-□
①	②	③	④	⑤	⑥

CE UK CA
RoHS

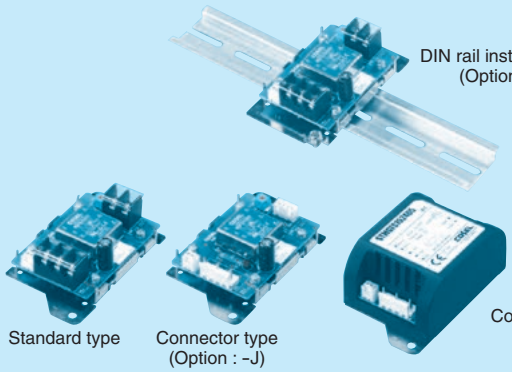

①Series name
②Single output
③Output wattage
④Input voltage
⑤Output voltage
⑥Optional
G : Capacitor between Input and Output is removed.
R : with Remote ON/OFF (Positive logic control)
J : Input/Output Connector
JN1 : Connector with case cover
N2 : With DIN rail installation type
JN3 : Connector with cover(plastic) and DIN rail installation type
V : Output voltage setting potentiometer externally

*When the option is set specifications may vary.

*Please remove short piece on CN4 to enable remote ON/OFF function.

MODEL		STMGFS15243R3	STMGFS152405	STMGFS152412	STMGFS152415
MAX OUTPUT WATTAGE[W]		13.2	15	15.6	15
DC OUTPUT	VOLTAGE[V] *1	3.3	5	12	15
	CURRENT[A]	4	3	1.3	1

SPECIFICATIONS

	MODEL		STMGFS15243R3	STMGFS152405	STMGFS152412	STMGFS152415
INPUT	VOLTAGE[V]		DC9 - 36			
	CURRENT[A] *2		0.63typ	0.71typ	0.73typ	0.70typ
	EFFICIENCY[%] *2		87typ	88typ	89typ	89typ
OUTPUT	VOLTAGE[V]		3.3	5	12	15
	CURRENT[A]		4	3	1.3	1
	LINE REGULATION[mV]		13.2max	20max	48max	60max
	LOAD REGULATION[mV]		60max	60max	100max	120max
	RIPPLE[mVp-p] *3	0 to +60℃	75max	75max	100max	100max
		-20 to +60℃	100max	100max	120max	120max
	RIPPLE NOISE[mVp-p] *3	0 to +60℃	120max	120max	150max	150max
		-20 to +60℃	200max	200max	200max	200max
	TEMPERATURE REGULATION[mV]	0 to +60℃	50max	50max	150max	180max
		-20 to +60℃	80max	80max	240max	290max
	DRIFT[mV] *4		20max	20max	48max	60max
	START-UP TIME[ms]		30max (Minimum input, Io=100%)			
	OUTPUT VOLTAGE ADJUSTMENT RANGE		2.97 - 3.63	4.50 - 5.50	10.80 - 13.20	13.50 - 16.50
	OUTPUT VOLTAGE SETTING[V] *5		3.29 - 3.41	4.97 - 5.14	11.85 - 12.25	14.83 - 15.33
PROTECTION CIRCUIT AND OTHERS	OVERCURRENT PROTECTION		Works over 105% of rating and recovers automatically			
	REMOTE ON/OFF		Provided (Negative logic L:ON, H:OFF)			

MODEL		STMGFS15483R3	STMGFS154805	STMGFS154812	STMGFS154815
MAX OUTPUT WATTAGE[W]		13.2	15	15.6	15
DC OUTPUT	VOLTAGE[V] *1	3.3	5	12	15
	CURRENT[A]	4	3	1.3	1

SPECIFICATIONS

	MODEL		STMGFS15483R3	STMGFS154805	STMGFS154812	STMGFS154815
INPUT	VOLTAGE[V]		DC18 - 76			
	CURRENT[A] *2		0.32typ	0.36typ	0.37typ	0.35typ
	EFFICIENCY[%] *2		87typ	88typ	88typ	89typ
OUTPUT	VOLTAGE[V]		3.3	5	12	15
	CURRENT[A]		4	3	1.3	1
	LINE REGULATION[mV]		13.2max	20max	48max	60max
	LOAD REGULATION[mV]		60max	60max	100max	120max
	RIPPLE[mVp-p] *3	0 to +60℃	75max	75max	100max	100max
		-20 to +60℃	100max	100max	120max	120max
	RIPPLE NOISE[mVp-p] *3	0 to +60℃	120max	120max	150max	150max
		-20 to +60℃	200max	200max	200max	200max
	TEMPERATURE REGULATION[mV]	0 to +60℃	50max	50max	150max	180max
		-20 to +60℃	80max	80max	240max	290max
	DRIFT[mV] *4		20max	20max	48max	60max
	START-UP TIME[ms]		30max (Minimum input, Io=100%)			
	OUTPUT VOLTAGE ADJUSTMENT RANGE		2.97 - 3.63	4.50 - 5.50	10.80 - 13.20	13.50 - 16.50
	OUTPUT VOLTAGE SETTING[V] *5		3.29 - 3.41	4.97 - 5.14	11.85 - 12.25	14.83 - 15.33
PROTECTION CIRCUIT AND OTHERS	OVERCURRENT PROTECTION		Works over 105% of rating and recovers automatically			
	REMOTE ON/OFF		Provided (Negative logic L:ON, H:OFF)			

GENERAL SPECIFICATIONS

ISOLATION	INPUT · RC-OUTPUT	DC1,500V 1minute, Cutoff current = 10mA, DC500V 1,000MΩ min (20±15℃)
	INPUT · RC-FG	DC1,000V 1minute, Cutoff current = 10mA, DC500V 1,000MΩ min (20±15℃)
	OUTPUT-FG	DC1,000V 1minute, Cutoff current = 10mA, DC500V 1,000MΩ min (20±15℃)
ENVIRONMENT	OPERATING TEMP.,HUMID.AND ALTITUDE	-20 to +70℃, 20 to 95%RH (Non condensing) (Refer to "Derating"), 3,000m (10,000feet) max
	STORAGE TEMP.,HUMID.AND ALTITUDE	-20 to +75℃, 20 to 95%RH (Non condensing), 9,000m (30,000feet) max
	VIBRATION	10 - 55Hz, 19.6m/s²(2G), 3minutes period, 60minutes each along X, Y and Z axis
	IMPACT	196.1m/s² (20G), 11ms, once each along X, Y and Z axis
SAFETY	AGENCY APPROVALS	UL60950-1, C-UL, EN62368-1 Complies
OTHERS	CASE SIZE/WEIGHT	52×27×93mm [2.05×1.06×3.66 inches] (W×H×D) / 110g max (When the option is set, refer to the page STMG-4)
	COOLING METHOD	Convection/Forced air

*1 STMGFW15xx05/STMGFW15xx12/STMGFW15xx15 is available as single output, +10V/+24V/+30V
*2 Rated input 12V, 24V or 48V DC Io=100%
*3 Measured by 100MHz oscilloscpe or Ripple-Noise meter (Equivalent to KIKUSUI-GIKEN : RM103).
*4 Drift is the DC output accuracy for eight hours period after a half-hour warm-up at 25℃.
*5 Rated input voltage (DC24V, DC48V), rated output wattage, ambient temperature at 25℃.
* Parailel operation with other model is not possible.

External view

Standard type

* External view of option G, R are the same as standard model.
External view of other type options, please refer to the page STMG-4.

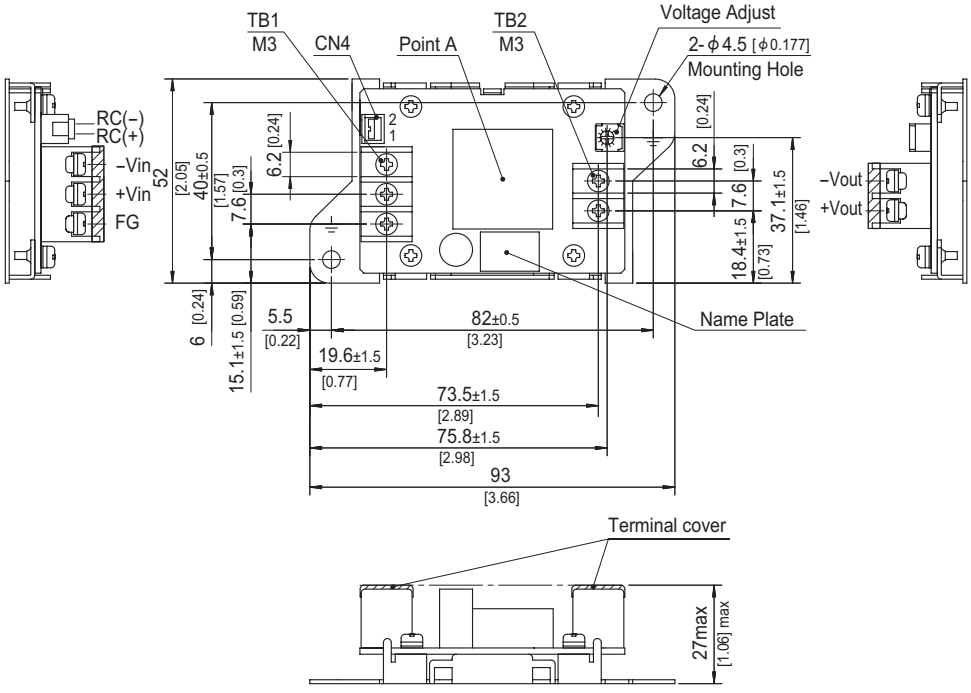

	I/O Connector		Mating Connector	Terminal
Remote ON/OFF	CN4	B2B-XH	XHP-2	Chain : SXH-001T-P0.6
				Loose : BXH-001T-P0.6

(Mfr.:J.S.T.)

* Tolerance ±1 [±0.04]
* Dimensions in mm, [ ]=inches
* Weight : 110g max
* PCB material / thickness : FR-4 / 1.6mm
* Mounting plate : Iron (surface finishing : nickel plating) / t=1.0mm
* Terminal block screw tightning torque M3 : 0.8N · m max
* CN4 has been installed short piece as factory setting (Except option R).
When remoto ON/OFF is used, please remove the installed short piece.

External view (Option type)

Connector type (-J)

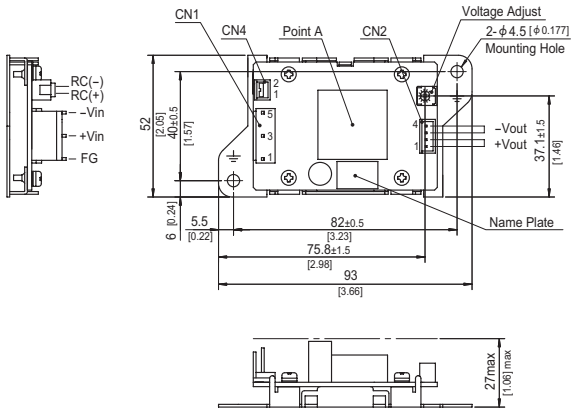

Case cover and connector type (-JN1)

∗The specifications of terminal block and Case cover type can not be set.

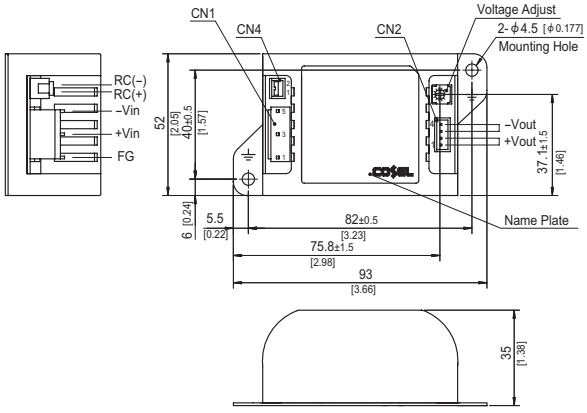

DIN rail installation type (-N2)

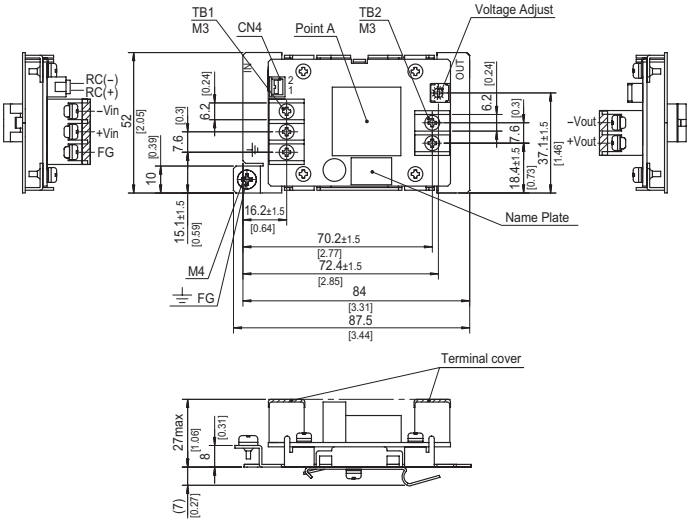

External voltage variable volume type (-V)

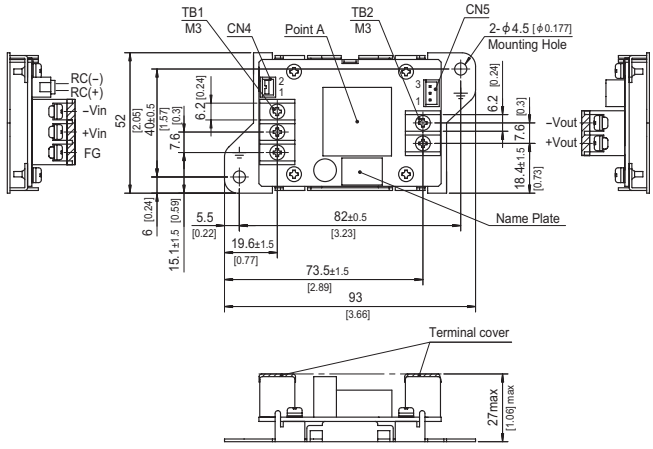

	I/O Connector		Mating Connector	Terminal
Connector Type Input	CN1	B3P5-VH	VHR-5N	Chain : SVH-21T-P1.1
				Loose : BVH-21T-P1.1
Connector Type Output	CN2	B4P-XH	XHP-4	Chain : SXH-001T-P0.6
				Loose : BXH-001T-P0.6
Remote ON/OFF	CN4	B2B-XH	XHP-2	Chain : SXH-001T-P0.6
				Loose : BXH-001T-P0.6
External voltage variable volume type	CN5	B3B-XH	XHP-3	Chain : SXH-001T-P0.6
				Loose : BXH-001T-P0.6

(Mfr.:J.S.T.)

∗ Tolerance ±1 [±0.04]
∗ Dimensions in mm, [ ]=inches
∗ Weight : Standard & Connector type 110g max
Case cover & DIN rail installation type 120g max
∗ PCB material / thickness : FR-4 / 1.6mm
∗ Mounting plate : Iron (surface finishing : nickel plating) / t=1.0mm
∗ Case : PBT
∗ Terminal block screw tightning torque M3 : 0.8N・m max
∗ CN4 has been installed jumper as factory setting (Except option R).
When remoto ON/OFF is used , please remove the installed jumper.
∗ Connector Type : Keep drawing current per pin below 2.5A for CN2.

COSEL DC-DC Converters PCB Mount Value-added Type

STMGFW15

Ordering information

STMGF W 15 24 05 -□

① ② ③ ④ ⑤ ⑥

①Series name
②Dual output
③Output wattage
④Input voltage
⑤Output voltage
⑥Optional
G : Capacitor between Input and Output is removed.
R : with Remote ON/OFF (Positive logic control)
J : Input/Output Connector
JN1 : Connector with case cover
N2 : With DIN rail installation type
JN3 : Connector with cover(plastic) and DIN rail installation type

CE UK CA
RoHS

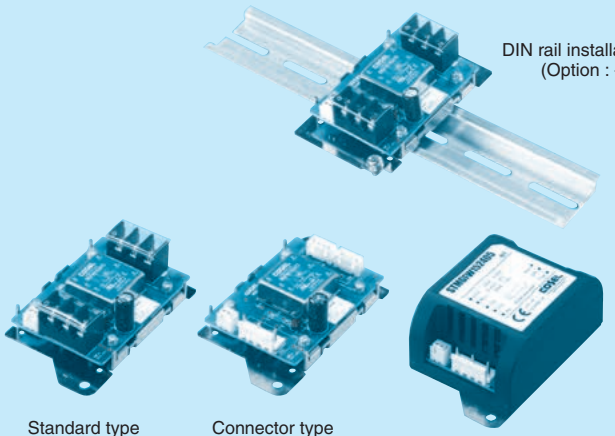

DIN rail installation type (Option : -N2)

Standard type

Connector type (Option : -J)

Connector with case cover (Option : -JN1)

＊When the option is set specifications may vary.

＊Please remove short piece on CN4 to enable remote ON/OFF function.

MODEL		STMGFW152405	STMGFW152412	STMGFW152415	STMGFW154805	STMGFW154812	STMGFW154815
MAX OUTPUT WATTAGE[W]		15	15.6	15	15	15.6	15
DC OUTPUT	VOLTAGE[V] ＊1	±5 or +10	±12 or +24	±15 or +30	±5 or +10	±12 or +24	±15 or +30
	CURRENT[A]	1.5	0.65	0.5	1.5	0.65	0.5

SPECIFICATIONS

	MODEL		STMGFW152405	STMGFW152412	STMGFW152415	STMGFW154805	STMGFW154812	STMGFW154815
INPUT	VOLTAGE[V]		DC9 - 36			DC18 - 76		
	CURRENT[A]	＊2	0.74typ	0.74typ	0.70typ	0.37typ	0.37typ	0.36typ
	EFFICIENCY[%]	＊2	84typ	88typ	89typ	84typ	87typ	88typ
OUTPUT	VOLTAGE[V]		±5(+10)	±12(+24)	±15(+30)	±5(+10)	±12(+24)	±15(+30)
	CURRENT[A]		1.5	0.65	0.5	1.5	0.65	0.5
	LINE REGULATION[mV]		40max	60max	75max	40max	60max	75max
	LOAD REGULATION[mV]	＊3	500max ＊5	600max	750max	500max ＊5	600max	750max
		＊4	250max	480max	600max	250max	480max	600max
	RIPPLE[mVp-p] ＊6	0 to +60℃	100max	100max	100max	100max	100max	100max
		-20 to +60℃	120max	120max	120max	120max	120max	120max
	RIPPLE NOISE[mVp-p] ＊6	0 to +60℃	150max	150max	150max	150max	150max	150max
		-20 to +60℃	200max	200max	200max	200max	200max	200max
	TEMPERATURE REGULATION[mV]	0 to +60℃	50max	150max	180max	50max	150max	180max
		-20 to +60℃	80max	240max	290max	80max	240max	290max
	DRIFT[mV]	＊7	50max	50max	60max	50max	50max	60max
	START-UP TIME[ms]		30max (Minimum input, Io=100%)					
	OUTPUT VOLTAGE SETTING[V]＊8		4.93 - 5.24	11.76 - 12.50	14.60 - 15.51	4.93 - 5.24	11.76 - 12.50	14.60 - 15.51
PROTECTION CIRCUIT AND OTHERS	OVERCURRENT PROTECTION		Works over 105% of rating and recovers automatically					
	REMOTE ON/OFF		Provided (Negative logic L:ON, H:OFF)					
ISOLATION	INPUT・RC-OUTPUT		DC1,500V 1minute, Cutoff current = 10mA, DC500V 1,000MΩ min (20±15℃)					
	INPUT・RC-FG		DC1,000V 1minute, Cutoff current = 10mA, DC500V 1,000MΩ min (20±15℃)					
	OUTPUT-FG		DC1,000V 1minute, Cutoff current = 10mA, DC500V 1,000MΩ min (20±15℃)					
ENVIRONMENT	OPERATING TEMP.,HUMID.AND ALTITUDE		-20 to +70℃, 20 to 95%RH (Non condensing) (Refer to “Derating”), 3,000m (10,000feet) max					
	STORAGE TEMP.,HUMID.AND ALTITUDE		-20 to +75℃, 20 to 95%RH (Non condensing), 9,000m (30,000feet) max					
	VIBRATION		10 - 55Hz, 19.6m/s² (2G), 3minutes period, 60minutes each along X, Y and Z axis					
	IMPACT		196.1m/s² (20G), 11ms, once each along X, Y and Z axis					
SAFETY	AGENCY APPROVALS		UL60950-1, C-UL, EN62368-1 Complies					
OTHERS	CASE SIZE/WEIGHT		52×27×93mm [2.05×1.06×3.66 inches] (W×H×D) / 110g max (When the option is set, refer to the page STMG-7)					
	COOLING METHOD		Convection/Forced air					

＊1 Single output +10V, +24V, +30V with no use of COM.
＊2 Rated input 12V, 24V or 48V DC Io=100%
＊3 Symmetrical loading from 5% to 100%.
＊4 Symmetrical loading from 20% to 100%.
＊5 Refer to the instruction manual 7.
＊6 Measured by 100MHz oscilloscpe or Ripple-Noise meter (Equivalent to KIKUSUI-GIKEN : RM103).
＊7 Drift is the DC output accuracy for eight hours period after a half-hour warm-up at 25℃.
＊8 Rated input voltage (DC24V, DC48V), rated output wattage, ambient temperature at 25℃.
＊ Parailel operation with other model is not possible.

External view

Standard type

＊External view of option G, R are the same as standard model.

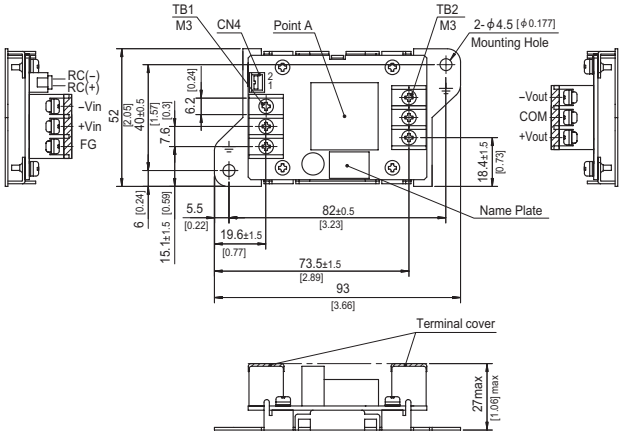

Connector type (−J)

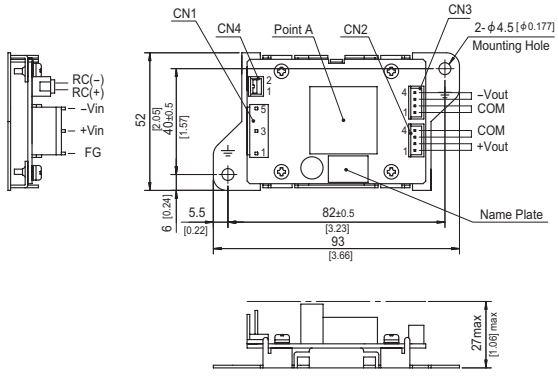

Case cover and connector type (−JN1)

＊The specifications of terminal block and Case cover type can not be set.

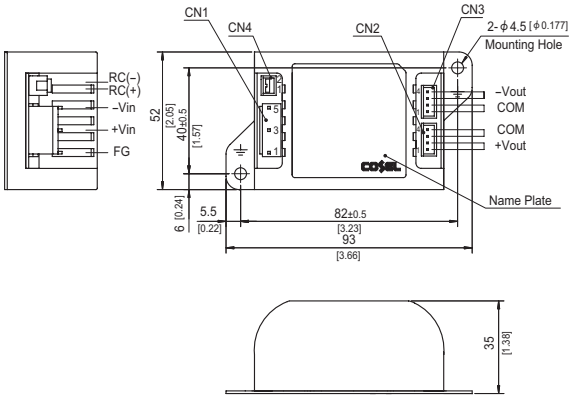

DIN rail installation type (−N2)

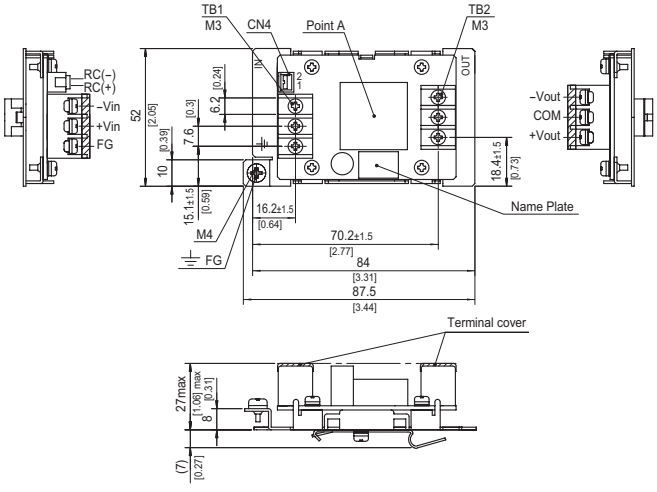

	I/O Connector		Mating Connector	Terminal
Connector Type Input	CN1	B3P5-VH	VHR-5N	Chain : SVH-21T-P1.1
				Loose : BVH-21T-P1.1
Connector Type Output	CN2, CN3	B4B-XH	XHP-4	Chain : SXH-001T-P0.6
				Loose : BXH-001T-P0.6
Remote ON/OFF	CN4	B2B-XH	XHP-2	Chain : SXH-001T-P0.6
				Loose : BXH-001T-P0.6

(Mfr.:J.S.T.)

＊ Tolerance ±1 [±0.04]
＊ Dimensions in mm, [ ]=inches
＊ Weight : Standard & Connector type 110g max
Case cover & DIN rail installation type 120g max
＊ PCB material / thickness : FR-4 / 1.6mm
＊ Mounting plate : Iron (surface finishing : nickel plating) / t=1.0mm
＊ Case : PBT
＊ Terminal block screw tightning torque M3 : 0.8N・m max
＊ CN4 has been installed jumper as factory setting (Except option R).
When remoto ON/OFF is used , please remove the installed jumper.
＊ Connector Type : Keep drawing current per pin below 2.5A for CN2,CN3.

COSEL DC-DC Converters PCB Mount Value-added Type

STMGFS30

Ordering information

STMGF	S	30	24	05	-□
①	②	③	④	⑤	⑥

CE UKCA

RoHS

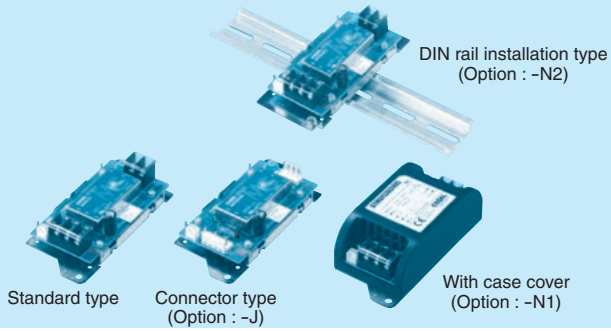

①Series name
②Single output
③Output wattage
④Input voltage
⑤Output voltage
⑥Optional
G : Capacitor between Input and Output is removed.
R : with Remote ON/OFF (Positive logic control)
J : Input/Output Connector
N1 : With case cover
N2 : With DIN rail installation type
N3 : With cover(plastic) and DIN rail installation type
V : Output voltage setting potentiometer externally

＊When the option is set specifications may vary.

＊Please remove short piece on CN4 to enable remote ON/OFF function.

MODEL		STMGFS30243R3	STMGFS302405	STMGFS302412	STMGFS302415
MAX OUTPUT WATTAGE[W]		24.75	30	30	30
DC OUTPUT	VOLTAGE[V] ＊1	3.3	5	12	15
	CURRENT[A]	7.5	6	2.5	2

SPECIFICATIONS

	MODEL		STMGFS30243R3	STMGFS302405	STMGFS302412	STMGFS302415
INPUT	VOLTAGE[V]		DC9 - 36			
	CURRENT[A] ＊2		1.16typ	1.39typ	1.40typ	1.40typ
	EFFICIENCY[%] ＊2		89typ	90typ	89typ	89typ
OUTPUT	VOLTAGE[V]		3.3	5	12	15
	CURRENT[A]		7.5	6	2.5	2
	LINE REGULATION[mV]		13.2max	20max	48max	60max
	LOAD REGULATION[mV]		60max	60max	100max	120max
	RIPPLE[mVp-p] ＊3	0 to +60℃	75max	75max	100max	100max
		-20 to +60℃	100max	100max	120max	120max
	RIPPLE NOISE[mVp-p] ＊3	0 to +60℃	120max	120max	150max	150max
		-20 to +60℃	200max	200max	200max	200max
	TEMPERATURE REGULATION[mV]	0 to +60℃	50max	50max	150max	180max
		-20 to +60℃	80max	80max	240max	290max
	DRIFT[mV] ＊4		20max	20max	48max	60max
	START-UP TIME[ms]		30max (Minimum input, Io=100%)			
	OUTPUT VOLTAGE ADJUSTMENT RANGE		2.97 - 3.63	4.50 - 5.50	10.80 - 13.20	13.50 - 16.50
	OUTPUT VOLTAGE SETTING[V]＊5		3.29 - 3.41	4.97 - 5.14	11.85 - 12.25	14.83 - 15.33
PROTECTION CIRCUIT AND OTHERS	OVERCURRENT PROTECTION		Works over 105% of rating and recovers automatically			
	OVERVOLTAGE PROTECTION[V]		Works over 120 to 160% of rating			
	REMOTE ON/OFF		Provided (Negative logic L:ON, H:OFF)			

MODEL		STMGFS30483R3	STMGFS304805	STMGFS304812	STMGFS304815
MAX OUTPUT WATTAGE[W]		24.75	30	30	30
DC OUTPUT	VOLTAGE[V] ＊1	3.3	5	12	15
	CURRENT[A]	7.5	6	2.5	2

SPECIFICATIONS

	MODEL		STMGFS30483R3	STMGFS304805	STMGFS304812	STMGFS304815
INPUT	VOLTAGE[V]		DC18 - 76			
	CURRENT[A] ＊2		0.58typ	0.70typ	0.70typ	0.70typ
	EFFICIENCY[%] ＊2		89typ	90typ	89typ	89typ
OUTPUT	VOLTAGE[V]		3.3	5	12	15
	CURRENT[A]		7.5	6	2.5	2
	LINE REGULATION[mV]		13.2max	20max	48max	60max
	LOAD REGULATION[mV]		60max	60max	100max	120max
	RIPPLE[mVp-p] ＊3	0 to +60℃	75max	75max	100max	100max
		-20 to +60℃	100max	100max	120max	120max
	RIPPLE NOISE[mVp-p] ＊3	0 to +60℃	120max	120max	150max	150max
		-20 to +60℃	200max	200max	200max	200max
	TEMPERATURE REGULATION[mV]	0 to +60℃	50max	50max	150max	180max
		-20 to +60℃	80max	80max	240max	290max
	DRIFT[mV] ＊4		20max	20max	48max	60max
	START-UP TIME[ms]		30max (Minimum input, Io=100%)			
	OUTPUT VOLTAGE ADJUSTMENT RANGE		2.97 - 3.63	4.50 - 5.50	10.80 - 13.20	13.50 - 16.50
	OUTPUT VOLTAGE SETTING[V]＊5		3.29 - 3.41	4.97 - 5.14	11.85 - 12.25	14.83 - 15.33
PROTECTION CIRCUIT AND OTHERS	OVERCURRENT PROTECTION		Works over 105% of rating and recovers automatically			
	OVERVOLTAGE PROTECTION[V]		Works over 120 to 160% of rating			
	REMOTE ON/OFF		Provided (Negative logic L:ON, H:OFF)			

GENERAL SPECIFICATIONS

ISOLATION	INPUT · RC-OUTPUT	DC1,500V 1minute, Cutoff current = 10mA, DC500V 1,000MΩ min (20±15℃)
	INPUT · RC-FG	DC1,000V 1minute, Cutoff current = 10mA, DC500V 1,000MΩ min (20±15℃)
	OUTPUT-FG	DC1,000V 1minute, Cutoff current = 10mA, DC500V 1,000MΩ min (20±15℃)
ENVIRONMENT	OPERATING TEMP.,HUMID.AND ALTITUDE	-20 to +70℃, 20 to 95%RH (Non condensing) (Refer to "Derating"), 3,000m (10,000feet) max
	STORAGE TEMP.,HUMID.AND ALTITUDE	-20 to +75℃, 20 to 95%RH (Non condensing), 9,000m (30,000feet) max
	VIBRATION	10 - 55Hz, 19.6m/s²(2G), 3minutes period, 60minutes each along X, Y and Z axis
	IMPACT	196.1m/s² (20G), 11ms, once each along X, Y and Z axis
SAFETY	AGENCY APPROVALS	UL60950-1, C-UL, EN62368-1 Complies
OTHERS	CASE SIZE/WEIGHT	52×27×117mm [2.05×1.06×4.61 inches] (W×H×D) / 140g max (When the option is set, refer to the page STMG-10)
	COOLING METHOD	Convection/Forced air

*1 STMGFW30xx05/STMGFW30xx12/STMGFW30xx15 is available as single output, +10V/+24V/+30V
*2 Rated input 12V, 24V or 48V DC Io=100%
*3 Measured by 100MHz oscilloscpe or Ripple-Noise meter (Equivalent to KIKUSUI-GIKEN : RM103).
*4 Drift is the DC output accuracy for eight hours period after a half-hour warm-up at 25℃.
*5 Rated input voltage (DC24V, DC48V), rated output wattage, ambient temperature at 25℃.
* Parailel operation with other model is not possible.

External view

Standard type

* External view of option G, R are the same as standard model.
External view of other type options, please refer to the page STMG-10.

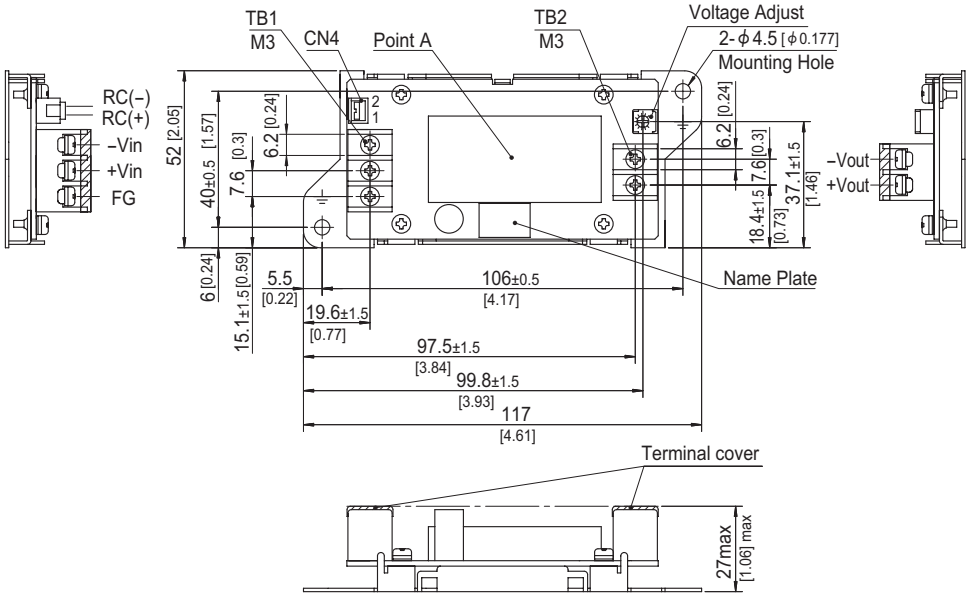

	I/O Connector		Mating Connector	Terminal
Remote ON/OFF	CN4	B2B-XH	XHP-2	Chain : SXH-001T-P0.6
				Loose : BXH-001T-P0.6

(Mfr.:J.S.T.)

* Tolerance ±1 [±0.04]
* Dimensions in mm, [ ]=inches
* Weight : 140g max
* PCB material / thickness : FR-4 / 1.6mm
* Mounting plate : Iron (surface finishing : nickel plating) / t=1.0mm
* Terminal block screw tightning torque M3 : 0.8N · m max
* CN4 has been installed jumper as factory setting (Except option R).
When remoto ON/OFF is used , please remove the installed jumper.

External view (Option type)

Connector type (-J)

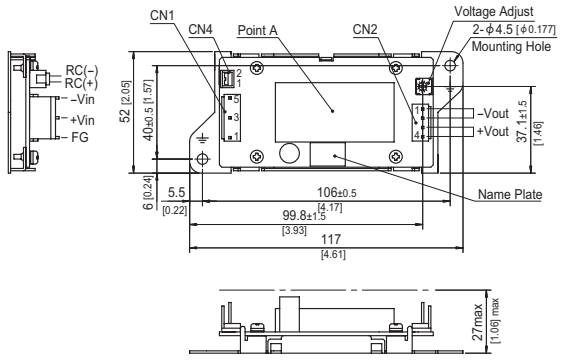

Case cover type (-N1)

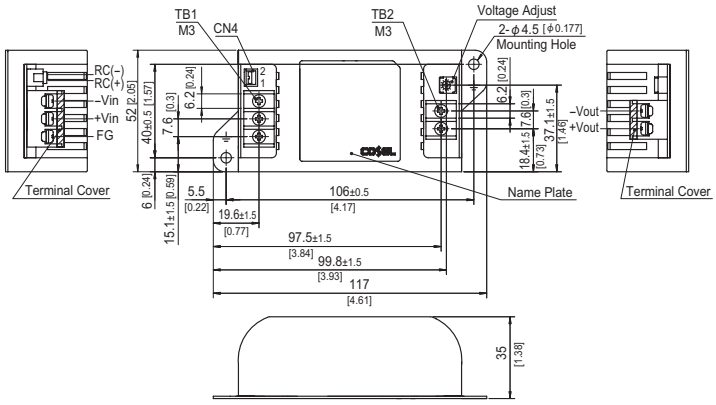

DIN rail installation type (-N2)

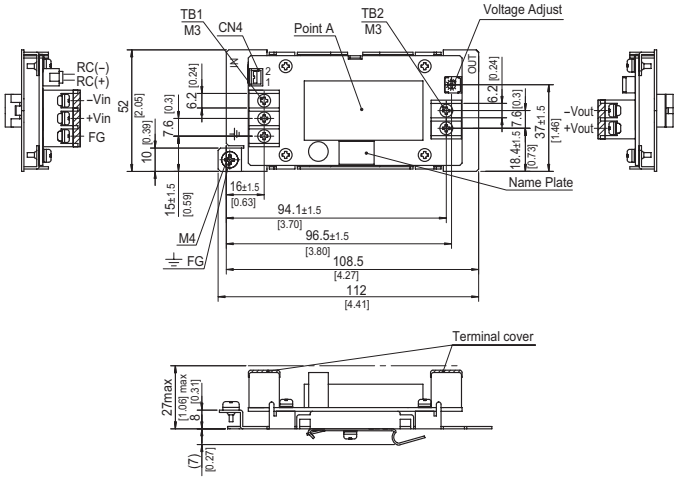

External voltage variable volume type (-V)

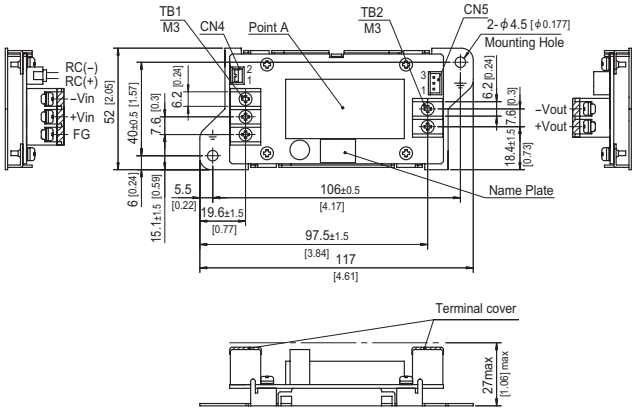

	I/O Connector		Mating Connector	Terminal
Connector Type Input	CN1	B3P5-VH	VHR-5N	Chain : SVH-21T-P1.1
				Loose : BVH-21T-P1.1
Connector Type Output	CN2	B4P-VH	VHR-4N	Chain : SVH-21T-P1.1
				Loose : BVH-21T-P1.1
Remote ON/OFF	CN4	B2B-XH	XHP-2	Chain : SXH-001T-P0.6
				Loose : BXH-001T-P0.6
External voltage variable volume type	CN5	B3B-XH	XHP-3	Chain : SXH-001T-P0.6
				Loose : BXH-001T-P0.6

(Mfr.:J.S.T.)

- ∗ Tolerance ±1 [±0.04]
- ∗ Dimensions in mm, [ ]=inches
- ∗ Weight : Standard & Connector type 140g max
  Case cover & DIN rail installation type 160g max
- ∗ PCB material / thickness : FR-4 / 1.6mm
- ∗ Mounting plate : Iron (surface finishing : nickel plating) / t=1.0mm
- ∗ Case : PBT
- ∗ Terminal block screw tightning torque M3 : 0.8N・m max
- ∗ CN4 has been installed jumper as factory setting (Except option R).
  When remoto ON/OFF is used, please remove the installed jumper.
- ∗ Connector Type : Keep drawing current per pin below 5A for CN2.

COSEL DC-DC Converters PCB Mount Value-added Type

STMGFW30

Ordering information

STMGF W 30 24 05 -□

① ② ③ ④ ⑤ ⑥

CE UK CA

RoHS

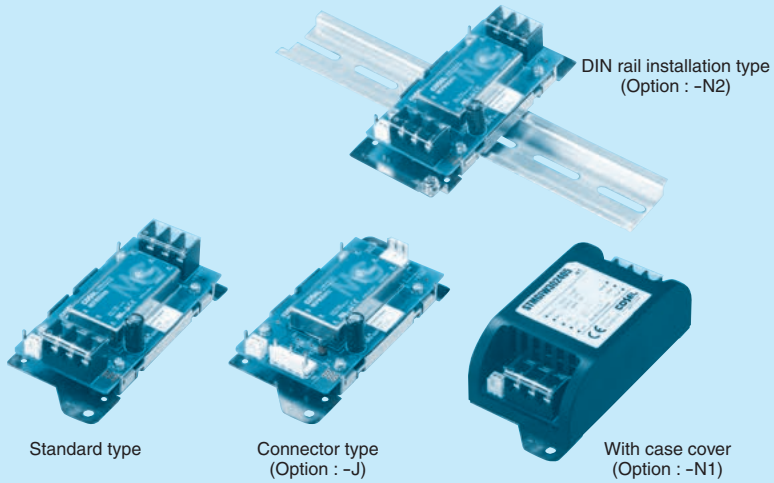

①Series name
②Dual output
③Output wattage
④Input voltage
⑤Output voltage
⑥Optional
G : Capacitor between Input and Output is removed.
R : with Remote ON/OFF (Positive logic control)
J : Input/Output Connector
N1 : With case cover
N2 : With DIN rail installation type
N3 : With cover(plastic) and DIN rail installation type

＊When the option is set specifications may vary.

＊Please remove short piece on CN4 to enable remote ON/OFF function.

MODEL		STMGFW302405	STMGFW302412	STMGFW302415	STMGFW304805	STMGFW304812	STMGFW304815
MAX OUTPUT WATTAGE[W]		20	30	30	20	30	30
DC OUTPUT	VOLTAGE[V] ＊1	±5 or +10	±12 or +24	±15 or +30	±5 or +10	±12 or +24	±15 or +30
	CURRENT[A]	2	1.25	1	2	1.25	1

SPECIFICATIONS

	MODEL		STMGFW302405	STMGFW302412	STMGFW302415	STMGFW304805	STMGFW304812	STMGFW304815
INPUT	VOLTAGE[V]		DC9 - 36			DC18 - 76		
	CURRENT[A]	＊2	0.98typ	1.42typ	1.44typ	0.49typ	0.71typ	0.72typ
	EFFICIENCY[%]	＊2	85typ	88typ	87typ	85typ	88typ	87typ
OUTPUT	VOLTAGE[V]		±5(+10)	±12(+24)	±15(+30)	±5(+10)	±12(+24)	±15(+30)
	CURRENT[A]		2	1.25	1	2	1.25	1
	LINE REGULATION[mV]		40max	60max	75max	40max	60max	75max
	LOAD REGULATION[mV]	＊3	500max ＊5	600max	750max	500max ＊5	600max	750max
		＊4	250max	480max	600max	250max	480max	600max
	RIPPLE[mVp-p] ＊6	0 to +60℃	100max	100max	100max	100max	100max	100max
		-20 to +60℃	120max	120max	120max	120max	120max	120max
	RIPPLE NOISE[mVp-p] ＊6	0 to +60℃	150max	150max	150max	150max	150max	150max
		-20 to +60℃	200max	200max	200max	200max	200max	200max
	TEMPERATURE REGULATION[mV]	0 to +60℃	50max	150max	180max	50max	150max	180max
		-20 to +60℃	80max	240max	290max	80max	240max	290max
	DRIFT[mV]	＊7	50max	50max	60max	50max	50max	60max
	START-UP TIME[ms]		30max (Minimum input, Io=100%)					
	OUTPUT VOLTAGE SETTING[V]	＊8	4.93 - 5.24	11.76 - 12.50	14.60 - 15.51	4.93 - 5.24	11.76 - 12.50	14.60 - 15.51
PROTECTION CIRCUIT AND OTHERS	OVERCURRENT PROTECTION		Works over 105% of rating and recovers automatically					
	OVERVOLTAGE PROTECTION[V]		Works over 120 to 160% of rating (Total of +V and -V)					
	REMOTE ON/OFF		Provided (Negative logic L:ON, H:OFF)					
ISOLATION	INPUT · RC-OUTPUT		DC1,500V 1minute, Cutoff current = 10mA, DC500V 1,000MΩ min (20±15℃)					
	INPUT · RC-FG		DC1,000V 1minute, Cutoff current = 10mA, DC500V 1,000MΩ min (20±15℃)					
	OUTPUT-FG		DC1,000V 1minute, Cutoff current = 10mA, DC500V 1,000MΩ min (20±15℃)					
ENVIRONMENT	OPERATING TEMP.,HUMID.AND ALTITUDE		-20 to +70℃, 20 to 95%RH (Non condensing) (Refer to “Derating”), 3,000m (10,000feet) max					
	STORAGE TEMP.,HUMID.AND ALTITUDE		-20 to +75℃, 20 to 95%RH (Non condensing), 9,000m (30,000feet) max					
	VIBRATION		10 - 55Hz, 19.6m/s² (2G), 3minutes period, 60minutes each along X, Y and Z axis					
	IMPACT		196.1m/s² (20G), 11ms, once each along X, Y and Z axis					
SAFETY	AGENCY APPROVALS		UL60950-1, C-UL, EN62368-1 Complies					
OTHERS	CASE SIZE/WEIGHT		52×27×117mm [2.05×1.06×4.61 inches] (W×H×D) / 140g max (When the option is set, refer to the page STMG-13)					
	COOLING METHOD		Convection/Forced air					

＊1 Single output +10V, +24V, +30V with no use of COM.
＊2 Rated input 12V, 24V or 48V DC Io=100%
＊3 Symmetrical loading from 5% to 100%.
＊4 Symmetrical loading from 20% to 100%.
＊5 Refer to the instruction manual 7.
＊6 Measured by 100MHz oscilloscpe or Ripple-Noise meter (Equivalent to KIKUSUI-GIKEN : RM103).
＊7 Drift is the DC output accuracy for eight hours period after a half-hour warm-up at 25℃.
＊8 Rated input voltage (DC24V, DC48V), rated output wattage, ambient temperature at 25℃.
＊ Parailel operation with other model is not possible.

External view

Standard type

✻ External view of option G, R are the same as standard model.

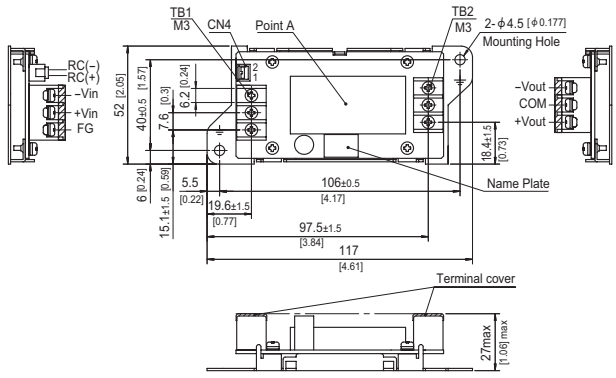

Connector type (-J)

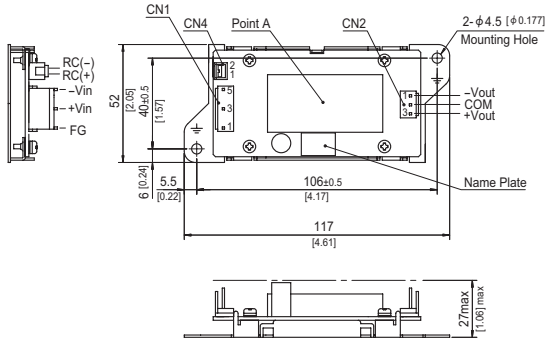

Case cover type (-N1)

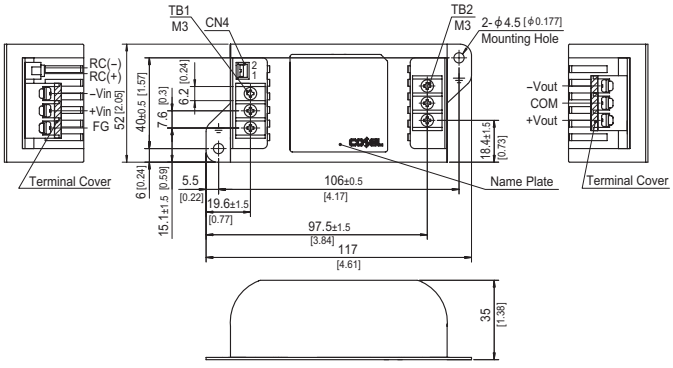

DIN rail installation type (-N2)

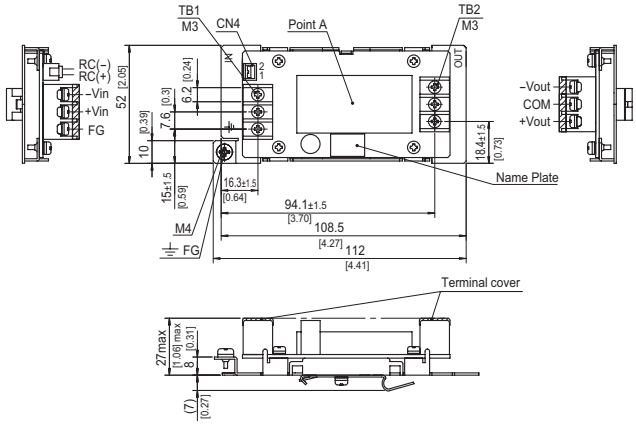

	I/O Connector		Mating Connector	Terminal
Connector Type Input	CN1	B3P5-VH	VHR-5N	Chain : SVH-21T-P1.1
				Loose : BVH-21T-P1.1
Connector Type Output	CN2	B3P-VH	VHR-3N	Chain : SVH-21T-P1.1
				Loose : BVH-21T-P1.1
Remote ON/OFF	CN4	B2B-XH	XHP-2	Chain : SXH-001T-P0.6
				Loose : BXH-001T-P0.6

(Mfr.:J.S.T.)

✻ Tolerance ±1 [±0.04]
✻ Dimensions in mm, [ ]=inches
✻ Weight : Standard & Connector type 140g max
Case cover & DIN rail installation type 160g max
✻ PCB material / thickness : FR-4 / 1.6mm
✻ Mounting plate : Iron (surface finishing : nickel plating) / t=1.0mm
✻ Case : PBT
✻ Terminal block screw tightning torque M3 : 0.8N・m max
✻ CN4 has been installed jumper as factory setting (Except option R). When remoto ON/OFF is used, please remove the installed jumper.
✻ Connector Type : Keep drawing current per pin below 5A for CN2.

COSEL DC-DC Converters PCB Mount Value-added Type

STMGFS80

Ordering information

STMGF	S	30	24	05	-□
①	②	③	④	⑤	⑥

CE UK CA
RoHS

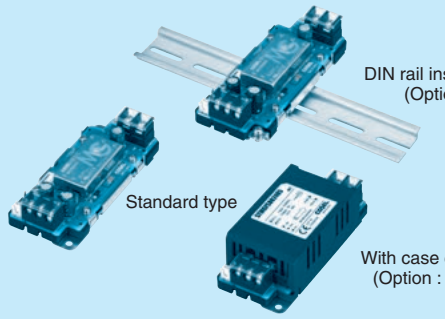

①Series name
②Single output
③Output wattage
④Input voltage
⑤Output voltage
⑥Optional
R : with Remote ON/OFF (Positive logic control)
N1: With case cover
N2: With DIN rail installation type
N3: With cover (plastic) and DIN rail installation type

＊When the option is set specifications may vary.

＊Please remove short piece on CN3 to enable remote ON/OFF function.

MODEL		STMGFS80243R3	STMGFS802405	STMGFS802412	STMGFS802415
MAX OUTPUT WATTAGE[W]		59.4	80	80.4	81
DC OUTPUT	VOLTAGE[V]	3.3	5	12	15
	CURRENT[A]	18	16	6.7	5.4

SPECIFICATIONS

	MODEL		STMGFS80243R3	STMGFS802405	STMGFS802412	STMGFS802415
INPUT	VOLTAGE[V]		DC9 - 36			
	CURRENT[A]	＊1	2.75typ	3.70typ	3.64typ	3.67typ
	EFFICIENCY[%]	＊1	90typ	90typ	92typ	92typ
OUTPUT	VOLTAGE[V]		3.3	5	12	15
	CURRENT[A]		18	16	6.7	5.4
	LINE REGULATION[mV]		13.2max	20max	48max	60max
	LOAD REGULATION[mV]		60max	60max	100max	120max
	RIPPLE[mVp-p] ＊2	0 to +60℃	75max	75max	100max	100max
		-20 to +60℃	100max	100max	120max	120max
		Io=0 to 10%	200max	200max	240max	240max
	RIPPLE NOISE[mVp-p] ＊2	0 to +60℃	75max	75max	100max	100max
		-20 to +60℃	150max	150max	150max	150max
		Io=0 to 10%	250max	250max	270max	270max
	TEMPERATURE REGULATION[mV]	0 to +60℃	50max	50max	150max	180max
		-20 to +60℃	80max	80max	240max	290max
	DRIFT[mV]	＊3	20max	20max	48max	60max
	START-UP TIME[ms]		30max (Minimum input, Rated load)			
	OUTPUT VOLTAGE ADJUSTMENT RANGE		2.97 - 3.63	4.50 - 5.50	10.80 - 13.20	13.50 - 16.50
	OUTPUT VOLTAGE SETTING[V]	＊4	3.29 - 3.41	4.97 - 5.14	11.85 - 12.25	14.83 - 15.33
PROTECTION CIRCUIT AND OTHERS	OVERCURRENT PROTECTION		Works over 105% of rating and recovers automatically			
	OVERVOLTAGE PROTECTION		Works over 115 to 140% of rating			
	REMOTE ON/OFF		Provided (Negative logic L:ON, H:OFF)			

MODEL		STMGFS80483R3	STMGFS804805	STMGFS804812	STMGFS804815
MAX OUTPUT WATTAGE[W]		59.4	80	80.4	81
DC OUTPUT	VOLTAGE[V]	3.3	5	12	15
	CURRENT[A]	18	16	6.7	5.4

SPECIFICATIONS

	MODEL		STMGFS80483R3	STMGFS804805	STMGFS804812	STMGFS804815
INPUT	VOLTAGE[V]		DC18 - 76			
	CURRENT[A]	＊1	1.38typ	1.85yp	1.82typ	1.83typ
	EFFICIENCY[%]	＊1	90typ	90typ	92typ	92typ
OUTPUT	VOLTAGE[V]		3.3	5	12	15
	CURRENT[A]		18	16	6.7	5.4
	LINE REGULATION[mV]		13.2max	20max	48max	60max
	LOAD REGULATION[mV]		60max	60max	100max	120max
	RIPPLE[mVp-p] ＊2	0 to +60℃	75max	75max	100max	100max
		-20 to +60℃	100max	100max	120max	120max
		Io=0 to 10%	200max	200max	240max	240max
	RIPPLE NOISE[mVp-p] ＊2	0 to +60℃	75max	75max	100max	100max
		-20 to +60℃	150max	150max	150max	150max
		Io=0 to 10%	250max	250max	270max	270max
	TEMPERATURE REGULATION[mV]	0 to +60℃	50max	50max	150max	180max
		-20 to +60℃	80max	80max	240max	290max
	DRIFT[mV]	＊3	20max	20max	48max	60max
	START-UP TIME[ms]		30max (Minimum input, Rated load)			
	OUTPUT VOLTAGE ADJUSTMENT RANGE		2.97 - 3.63	4.50 - 5.50	10.80 - 13.20	13.50 - 16.50
	OUTPUT VOLTAGE SETTING[V]	＊4	3.29 - 3.41	4.97 - 5.14	11.85 - 12.25	14.83 - 15.33
PROTECTION CIRCUIT AND OTHERS	OVERCURRENT PROTECTION		Works over 105% of rating and recovers automatically			
	OVERVOLTAGE PROTECTION		Works over 115 to 140% of rating			
	REMOTE ON/OFF		Provided (Negative logic L:ON, H:OFF)			

GENERAL SPECIFICATIONS

ISOLATION	INPUT・RC-OUTPUT	DC1,500V 1minute, Cutoff current = 10mA, DC500V 1,000MΩ min (20±15℃)
	INPUT・RC-FG	DC1,000V 1minute, Cutoff current = 10mA, DC500V 1,000MΩ min (20±15℃)
	OUTPUT-FG	DC1,000V 1minute, Cutoff current = 10mA, DC500V 1,000MΩ min (20±15℃)
ENVIRONMENT	OPERATING TEMP.,HUMID.AND ALTITUDE	-20 to +70℃, 20 to 95%RH (Non condensing) (Refer to "Derating"), 3,000m (10,000feet) max
	STORAGE TEMP.,HUMID.AND ALTITUDE	-20 to +75℃, 20 to 95%RH (Non condensing), 9,000m (30,000feet) max
	VIBRATION	10 - 55Hz, 19.6m/s²(2G), 3minutes period, 60minutes each along X, Y and Z axis
	IMPACT	196.1m/s² (20G), 11ms, once each along X, Y and Z axis
SAFETY	AGENCY APPROVALS	UL62368-1, C-UL(CSA62368-1), EN62368-1 Complies
OTHERS	CASE SIZE/WEIGHT	52×29×117mm [2.05×1.14×4.61 inches] (W×H×D) / 170g max
	COOLING METHOD	Convection/Forced air

*1 Rated input 12V, 24V or 48V DC Io=100%
*2 Measured by 100MHz oscilloscpe or Ripple-Noise meter (Equivalent to KIKUSUI-GIKEN : RM103).
*3 Drift is the DC output accuracy for eight hours period after a half-hour warm-up at 25℃.
*4 Rated input voltage (DC24V, DC48V), rated output wattage, ambient temperature at 25℃.
* Parailel operation with other model is not possible.

External view

Standard type

* External view of option R is the same as standard model.
External view of other type options, please refer to the page STMG-16.

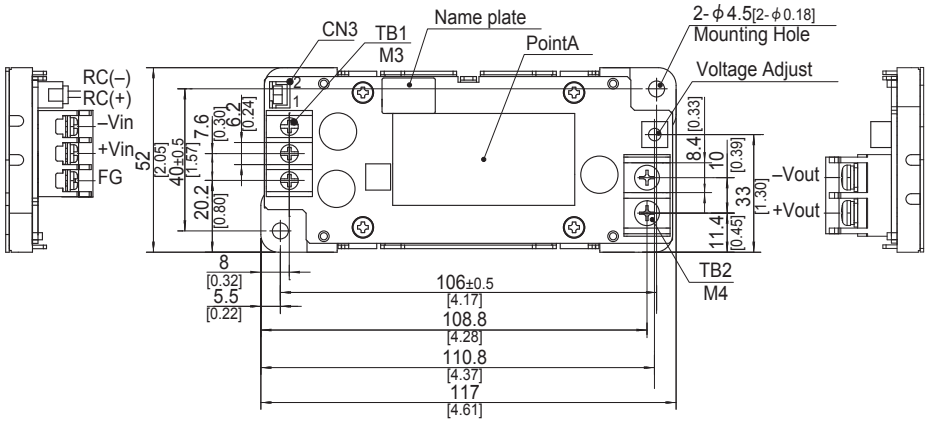

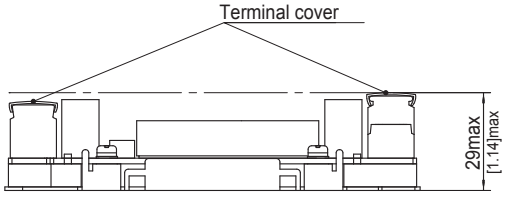

	I/O Connector		Mating Connector	Terminal
Remote ON/OFF	CN3	B2B-XH	XHP-2	Chain : SXH-001T-P0.6
				Loose : BXH-001T-P0.6

(Mfr.:J.S.T.)

* Tolerance ±1 [±0.04]
* Dimensions in mm, [ ]=inches
* Weight : 170g max
* PCB material / thickness : FR-4 / 1.6mm
* Mounting plate : Iron (surface finishing : nickel plating) / t=1.0mm
* Terminal block screw tightning torque M3 : 0.8N・m max
M4 : 1.6N・m max
* CN3 has been installed jumper as factory setting (Except option R).
When remoto ON/OFF is used , please remove the installed jumper.

External view (Option type)

Case cover type (-N1)

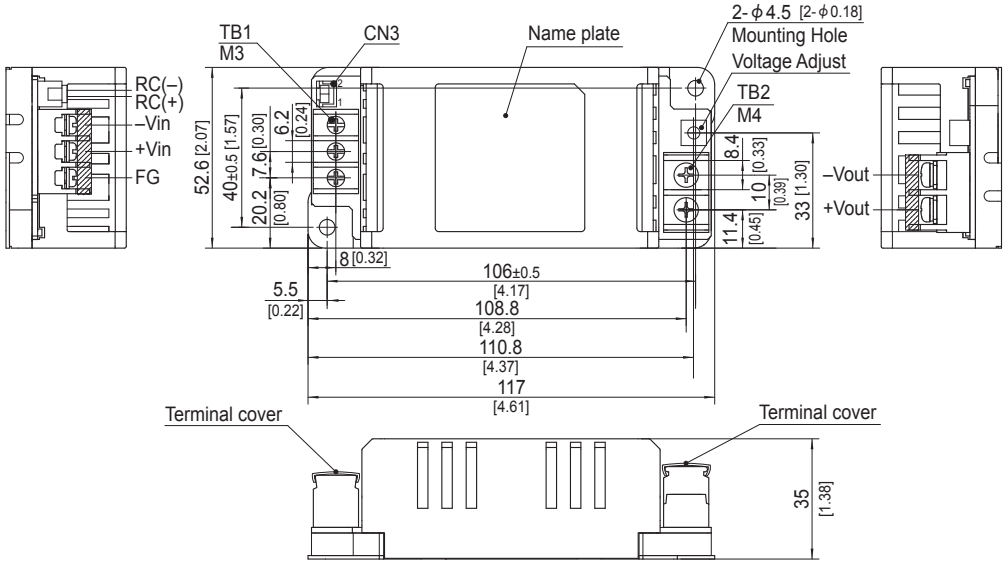

DIN rail installation type (-N2)

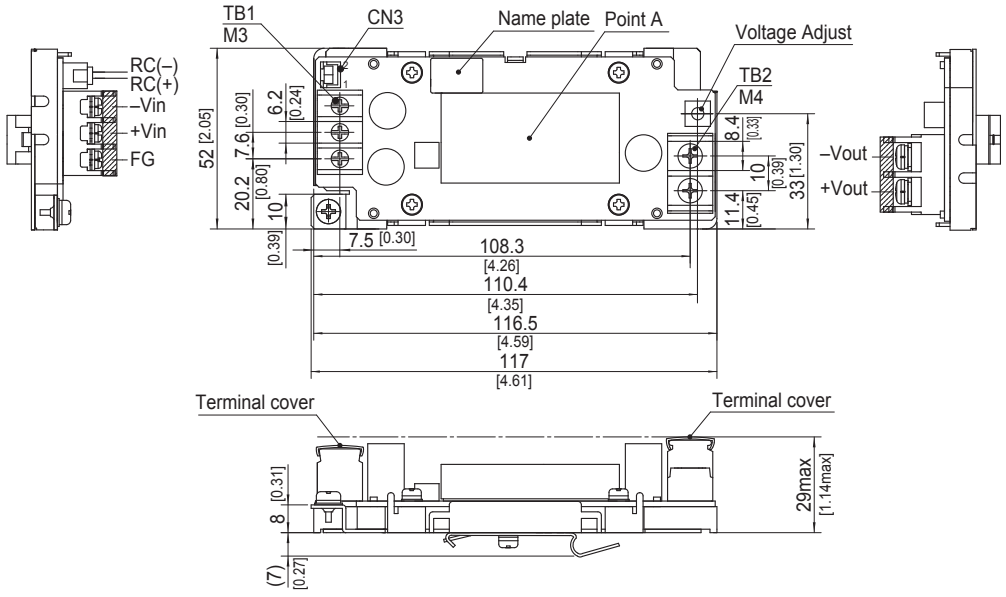

	I/O Connector		Mating Connector	Terminal
Remote ON/OFF	CN3	B2B-XH	XHP-2	Chain : SXH-001T-P0.6
				Loose : BXH-001T-P0.6

(Mfr.:J.S.T.)

- ✻ Tolerance ±1 [±0.04]
- ✻ Dimensions in mm, [ ]=inches
- ✻ Weight : Case cover type 210g max
  DIN rail installation type 200g max
- ✻ PCB Material / thickness FR-4 / t=1.6mm
- ✻ Mounting plate : Iron (surface finishing: nickel plating) / t=1.0mm
- ✻ Case : PBT
- ✻ Terminal block screw tightening torque
  M3 : 0.8N・m max
  M4 : 1.6N・m max
- ✻ CN3 has been installed jumper as factory setting (Except option R)
  When remote ON/OFF is used,please remove the installed jumper.

Assembling and Installation Method

Installation

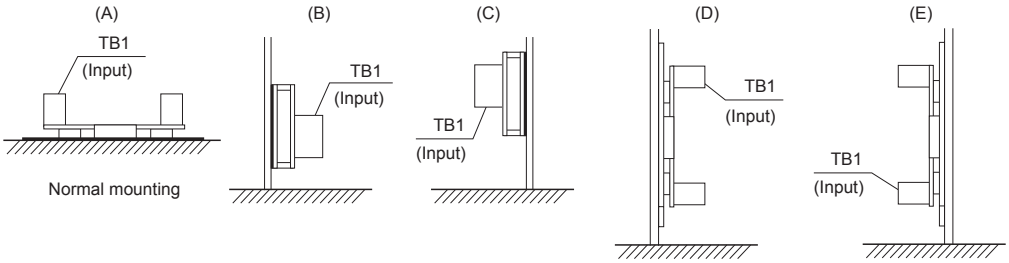

■Derating curve varies depending on the mounting direction.Refer to “Derating”

■Please note that a power supply and chassis will become hot depending on mounting direction or operating condition.

■In case of metal chassis, keep the distance between d1 for to insulate between lead of component and metal chassis. If it is less than d1, insert the insulation sheet between power supply and metal chassis.

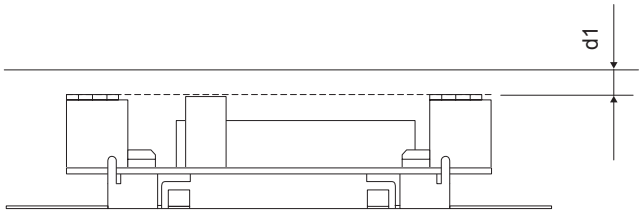

d1=4mm min.

Derating

● STMGFS80 Derating curve for input voltage

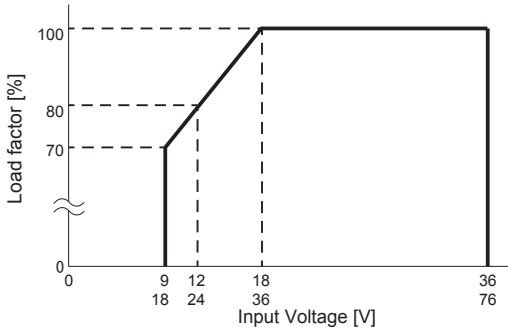

● STMGFS15/STMGFW15 Ambient temperature derating curve

■Specifications for ripple and ripple noise changese in the shaded area.

■In the case of Convection Cooling

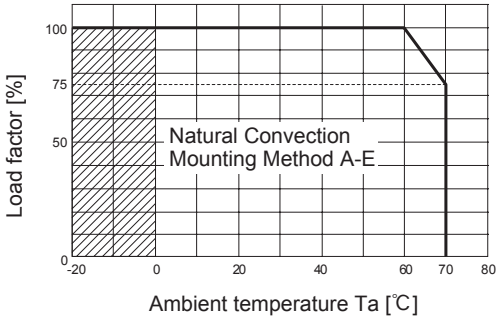

(1) Standard type (No Case cover type)

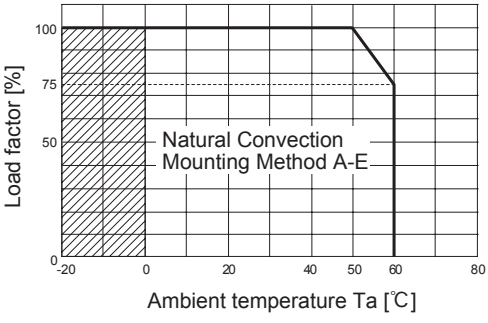

(2) Case cover type

Derating

■In the case of Forced Air Cooling

In case of forced air cooling, please have sufficient ventilation to keep the temperature of point A in Instruction Manual5 at 105℃ or below. Please also make sure that the ambient temperature does not exceed the range shown in below.

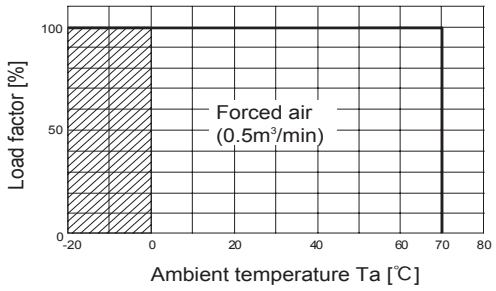

(1) Standard type (No Case cover type)

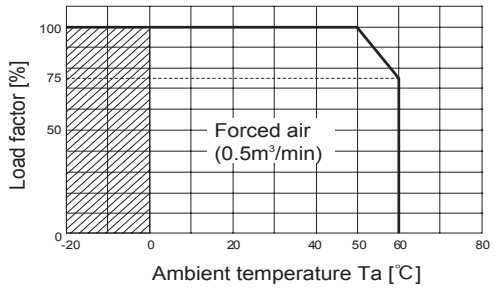

(2) Case cover type

● STMGFS30/STMGFW30 Ambient temperature derating curve

■Specifications for ripple and ripple noise changese in the shaded area.

■In the case of Convection Cooling

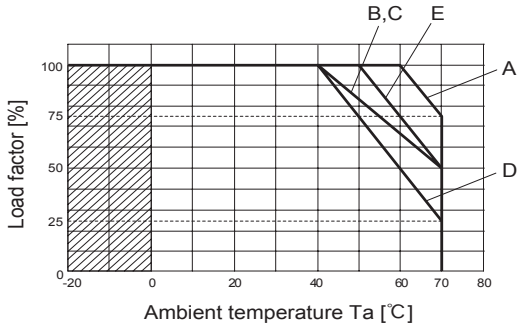

(1) Standard type (No Case cover type)

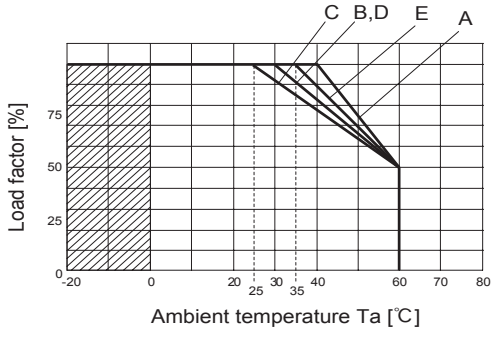

(2) Case cover type

■In the case of Forced Air Cooling

In case of forced air cooling, please have sufficient ventilation to keep the temperature of point A in Instruction Manual5 at 105℃ or below. Please also make sure that the ambient temperature does not exceed the range shown in below.

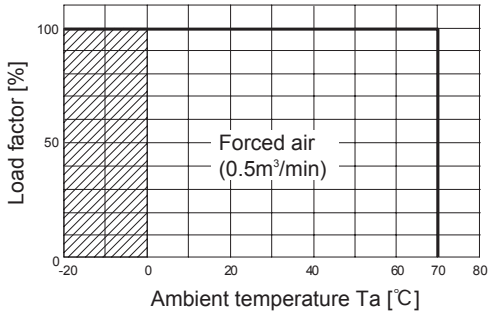

(1) Standard type (No Case cover type)

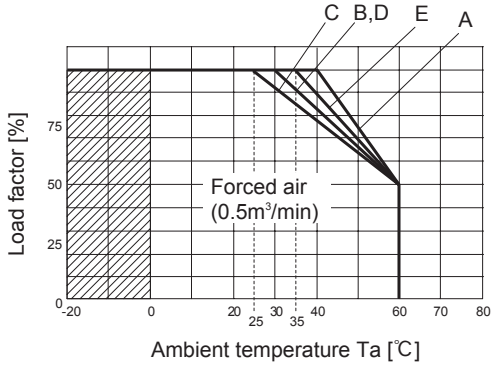

(2) Case cover type

Derating

● STMGFS80 Ambient temperature derating curve (Reference value)

■Specifications for ripple and ripple noise changese in the shaded area.

■In the case of Convection Cooling

When using the product, make sure that the temperature at point A is below the temperature shown in the instruction manual 5.
Please also make sure that the ambient temperature does not exceed 70℃.

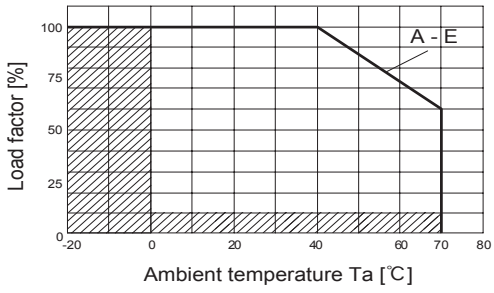

(1) Standard type (No Case cover type)

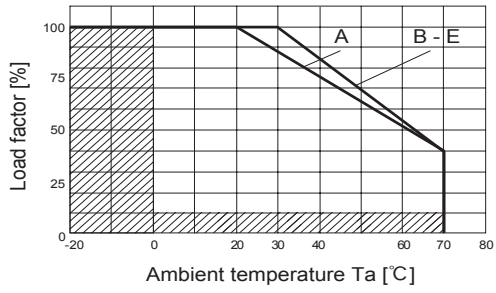

(2) Case cover type

Instruction Manual

◆ It is neccessary to read the “Instruction Manual” and “Before using our product” before you use our product.

Basic Characteristics Data

Model	Circuit method	Switching frequency [kHz] (reference)	Input current [A]	Inrush current protection	PCB/Pattern＊4			Series/Parailel operation availability	
					Material	Single sided	Double sided	Series operation	Parailel operation
STMGF15	Flyback converter	445-495	＊1	-	glass fabric base,epoxy resin		Yes	Yes	＊2
STMGF30	Forward converter	380-460	＊1	-	glass fabric base,epoxy resin		Yes	Yes	＊2
STMGFS80	Flyback converter	100-1500＊3	＊1	-	glass fabric base,epoxy resin		Yes	Yes	＊2

＊1 Refer to Specification.
＊2 Refer to Instruction Manual.
＊3 The value changes depending on input and load.
＊4 MG series with the power supply unit, please refer to the basic characteristics of the MG series data.