COSEL

For Reference

TEST DATA OF PDA75F-5

Regulated DC Power Supply
November 2, 2026

Approved by : Yoshiaki Shimizu
Design Manager

Prepared by : Riku Okuda
Design Engineer

COSEL CO.,LTD.

COSEL

CONTENTS

1.Input Current (by Load Current) ・・・・・・・・・・・・・・・・・・・・・・・・ 1
2.Efficiency (by Load Current) ・・・・・・・・・・・・・・・・・・・・・・・・ 2
3.Power Factor (by Load Current) ・・・・・・・・・・・・・・・・・・・・・・・ 3
4.Inrush Current ・・・・・・・・・・・・・・・・・・・・・・・・・・・・・・・・ 4
5.Leakage Current ・・・・・・・・・・・・・・・・・・・・・・・・・・・・・・・ 5
6.Line Regulation ・・・・・・・・・・・・・・・・・・・・・・・・・・・・・・・ 6
7.Load Regulation ・・・・・・・・・・・・・・・・・・・・・・・・・・・・・・・ 7
8.Ripple-Noise ・・・・・・・・・・・・・・・・・・・・・・・・・・・・・・・・・ 7
9.Dynamic Load Response ・・・・・・・・・・・・・・・・・・・・・・・・・・・ 8
10.Rise and Fall Time ・・・・・・・・・・・・・・・・・・・・・・・・・・・・・ 9
11.Hold-Up Time ・・・・・・・・・・・・・・・・・・・・・・・・・・・・・・・・ 10
12.Instantaneous Interruption Compensation ・・・・・・・・・・・・・・・・・・ 11
13.Overcurrent Protection ・・・・・・・・・・・・・・・・・・・・・・・・・・・ 12
14.Ambient Temperature Drift ・・・・・・・・・・・・・・・・・・・・・・・・・ 13
15.Minimum Input Voltage for Regulated Output Voltage ・・・・・・・・・・・・ 13
16.Overvoltage Protection ・・・・・・・・・・・・・・・・・・・・・・・・・・・ 13
17.Figure of Testing Circuitry ・・・・・・・・・・・・・・・・・・・・・・・・・ 14
(Final Page 15)

COSEL

Model	PDA75F-5
Item	Input Current (by Load Current)
Object	———————

Temperature 25°C
Testing Circuitry Figure A

1.Graph

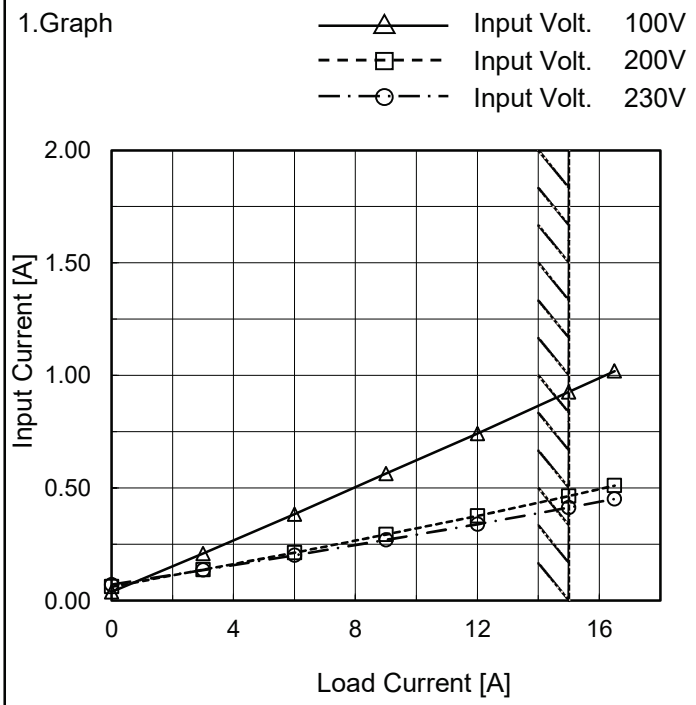

Note: Slanted line shows the range of the rated load current.

2.Values

Load Current [A]	Input Current [A]		
	Input Volt. 100[V]	Input Volt. 200[V]	Input Volt. 230[V]
0.0	0.039	0.062	0.071
3.0	0.209	0.138	0.136
6.0	0.384	0.214	0.201
9.0	0.564	0.294	0.270
12.0	0.741	0.376	0.339
15.0	0.926	0.465	0.413
16.5	1.020	0.511	0.452
--	-	-	-
--	-	-	-
--	-	-	-
--	-	-	-

BC-12272

COSEL

Model	PDA75F-5
Item	Efficiency (by Load Current)
Object	———————

Temperature 25°C
Testing Circuitry Figure A

1.Graph

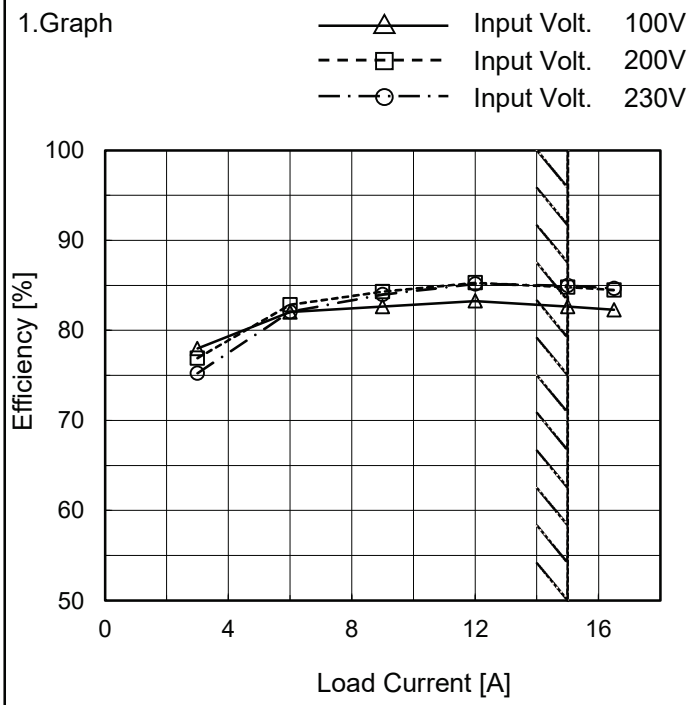

Note: Slanted line shows the range of the rated load current.

2.Values

Load Current [A]	Efficiency [%]		
	Input Volt. 100[V]	Input Volt. 200[V]	Input Volt. 230[V]
0.0	-	-	-
3.0	78.0	76.9	75.3
6.0	82.0	82.8	82.1
9.0	82.7	84.3	84.0
12.0	83.3	85.3	85.2
15.0	82.6	84.8	85.0
16.5	82.3	84.5	84.7
--	-	-	-
--	-	-	-
--	-	-	-
--	-	-	-

COSEL

Model	PDA75F-5
Item	Power Factor (by Load Current)
Object	————————

Temperature 25°C
Testing Circuitry Figure A

1.Graph

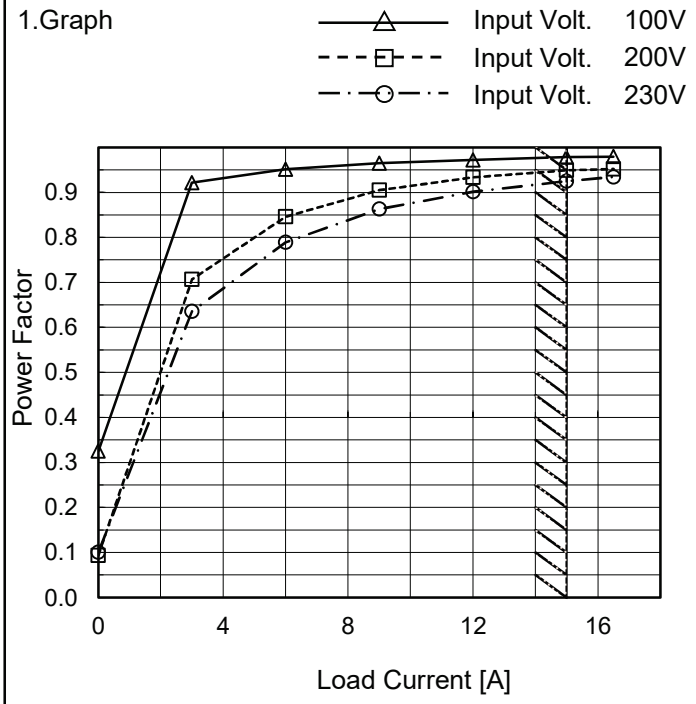

Note: Slanted line shows the range of the rated load current.

2.Values

Load Current [A]	Power Factor		
	Input Volt. 100[V]	Input Volt. 200[V]	Input Volt. 230[V]
0.0	0.326	0.094	0.100
3.0	0.921	0.707	0.636
6.0	0.951	0.846	0.789
9.0	0.965	0.905	0.863
12.0	0.972	0.934	0.901
15.0	0.978	0.949	0.925
16.5	0.979	0.952	0.935
--	-	-	-
--	-	-	-
--	-	-	-
--	-	-	-

COSEL

Model	PDA75F-5
Item	Inrush Current
Object	————————

Temperature 25°C
Testing Circuitry Figure A

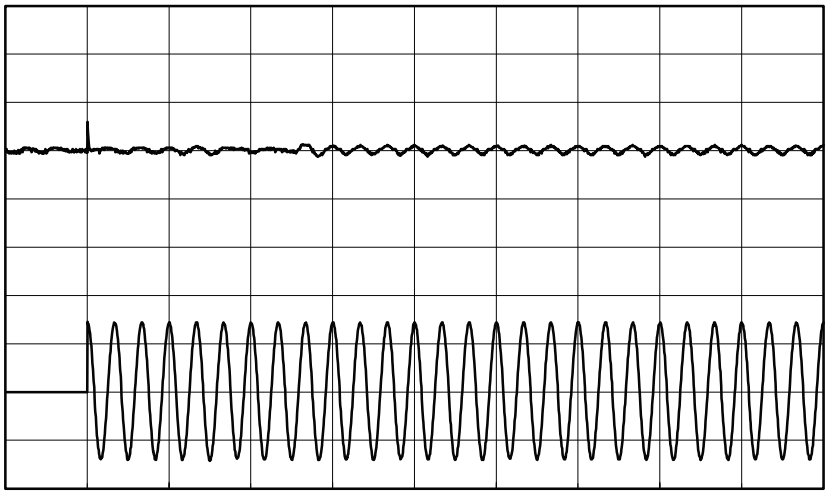

Input Voltage 100 V
Frequency 60 Hz
Load 100 %

Primary inrush current :
12.0 A
Secondary inrush current :
2.7 A

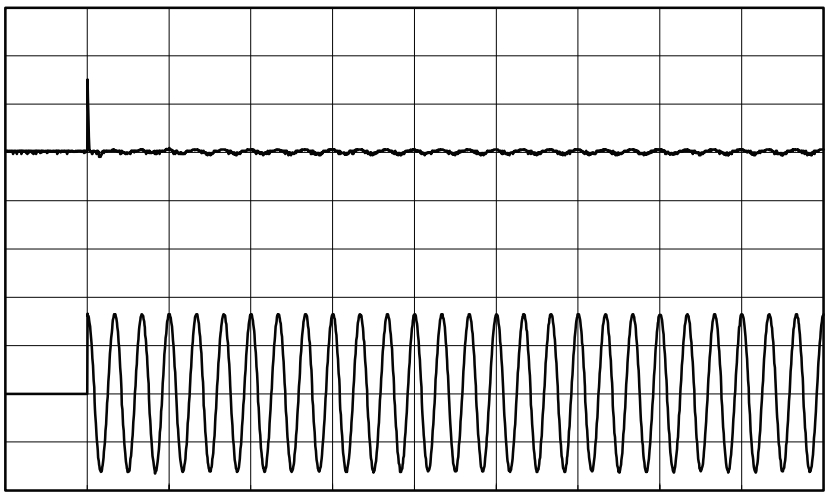

Input Voltage 230 V
Frequency 60 Hz
Load 100 %

Primary inrush current :
30.3 A
Secondary inrush current :
1.8 A

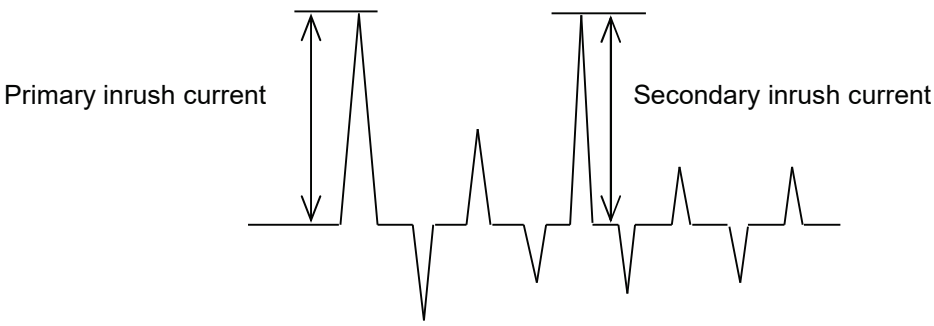

BC-12272

COSEL

Model	PDA75F-5	
Item	Leakage Current	Temperature 25°C Testing Circuitry Figure C
Object	———————————	

1.Results

[mA]

Standards	Testing Circuitry	Measuring Method	Input Volt.			Note
			100 [V]	230 [V]	240 [V]	
DEN-AN	Figure C-1	Both phases	0.13	0.33	0.35	Operation
		One of phases	0.25	0.63	0.66	Stand by
IEC62368-1	Figure C-2	Both phases	0.13	0.33	0.34	Operation
		One of phases	0.25	0.63	0.65	Stand by
	Figure C-3	Both phases	0.13	0.32	0.34	Operation
		One of phases	0.25	0.62	0.65	Stand by

The value for "One of phases" is the reference value only.

2.Condition

Leakage current value is concluded after measuring both phases of AC input and by choosing the larger one.

COSEL

Model	PDA75F-5
Item	Line Regulation
Object	+5V15A

Temperature 25°C
Testing Circuitry Figure A

1.Graph

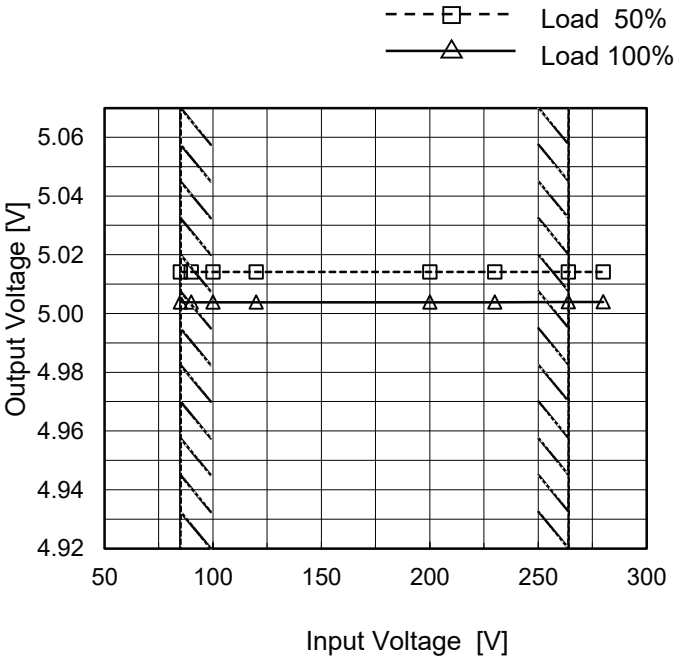

Note: Slanted line shows the range of the rated input voltage.

2.Values

Input Voltage [V]	Output Voltage [V]	
	Load 50%	Load 100%
85	5.014	5.004
90	5.014	5.004
100	5.014	5.004
120	5.014	5.004
200	5.014	5.004
230	5.014	5.004
264	5.014	5.004
280	5.014	5.004
--	-	-

COSEL

Model	PDA75F-5
Item	Load Regulation
Object	+5V15A

Temperature 25°C
Testing Circuitry Figure A

1.Graph

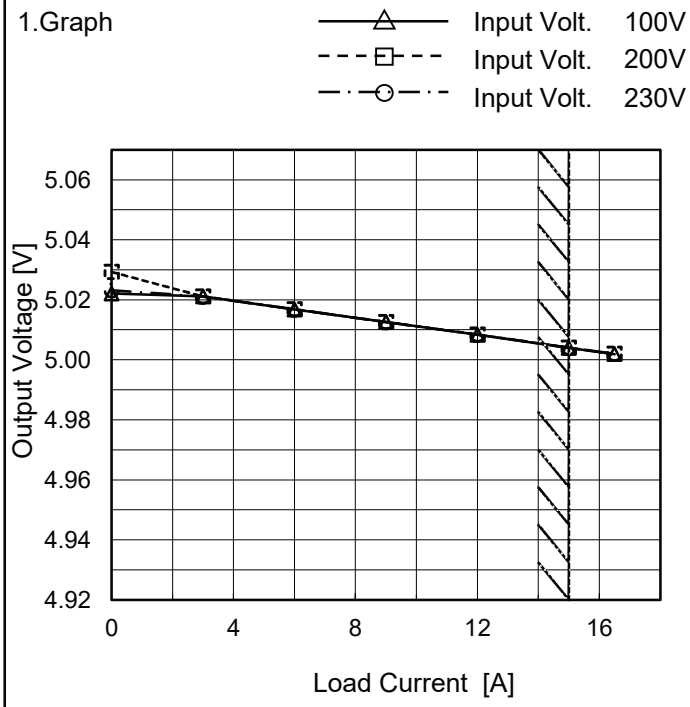

Note: Slanted line shows the range of the rated load current.

2.Values

Load Current [A]	Output Voltage [V]		
	Input Volt. 100[V]	Input Volt. 200[V]	Input Volt. 230[V]
0.0	5.022	5.029	5.023
3.0	5.021	5.021	5.021
6.0	5.017	5.017	5.017
9.0	5.013	5.013	5.013
12.0	5.008	5.008	5.008
15.0	5.004	5.004	5.004
16.5	5.002	5.002	5.002
--	--	--	--
--	--	--	--
--	--	--	--
--	--	--	--

Item	Ripple-Noise
Object	+5V15A

Temperature 25°C
Testing Circuitry Figure B

1.Graph

Input Voltage 230V
Load 100%

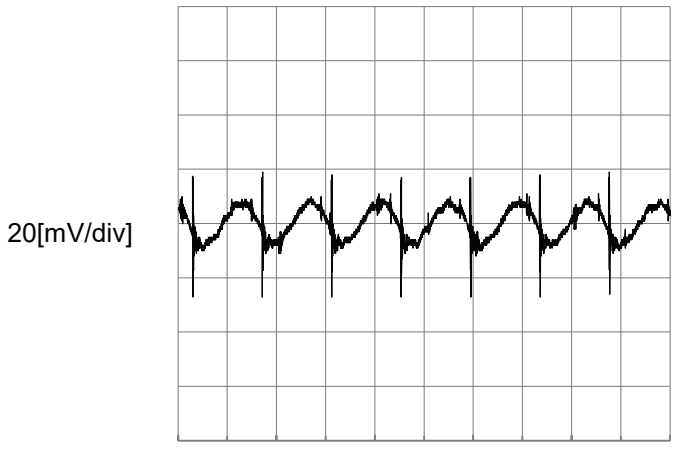

BC-12272

COSEL

Model	PDA75F-5
Item	Dynamic Load Response
Object	+5V15A

Temperature 25°C
Testing Circuitry Figure A

Input Volt. 230 V
Cycle 1000 ms

Response. t1=t2=50µs. Typ



Load 0%(0A) ←→
Load 100%(15A)

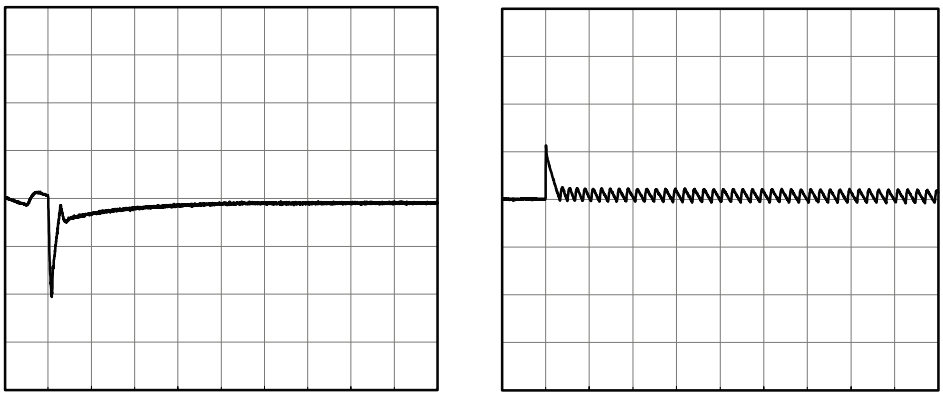

200[mV/div]

2[ms/div] 10[ms/div]

Load 50%(7.5A) ←→
Load 100%(15A)

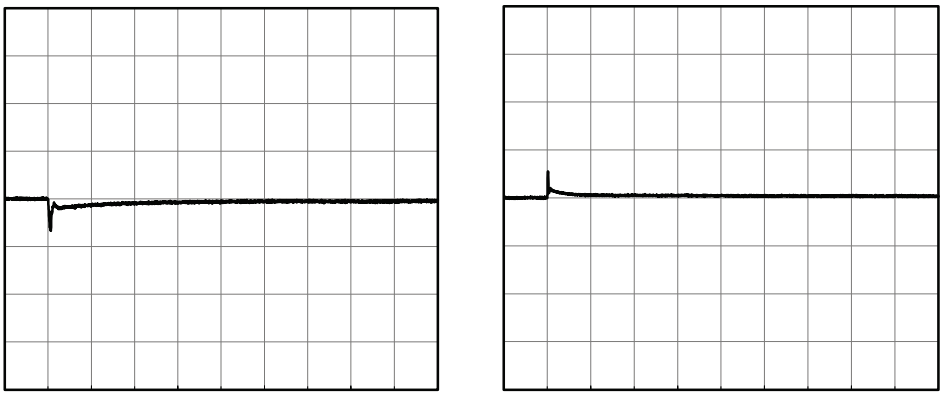

200[mV/div]

2[ms/div] 10[ms/div]

Load 0%(0A) ←→
Load 50%(7.5A)

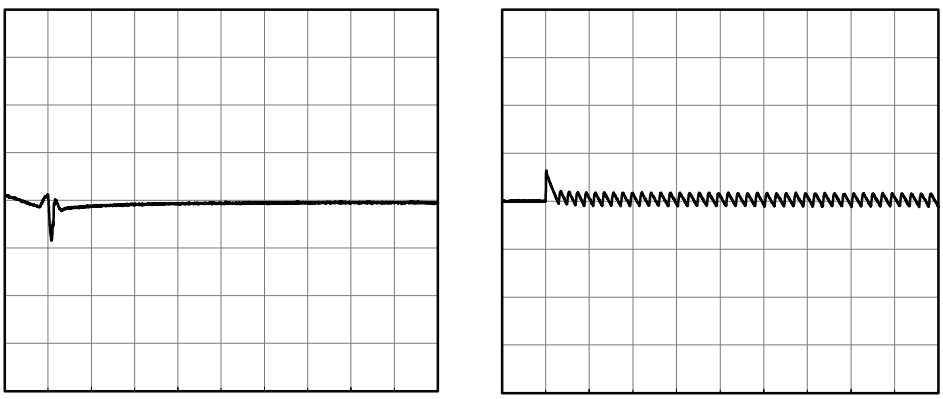

200[mV/div]

2[ms/div] 10[ms/div]

COSEL

Model	PDA75F-5
Item	Rise and Fall Time
Object	+5V15A

Temperature 25°C
Testing Circuitry Figure A

1.Graph

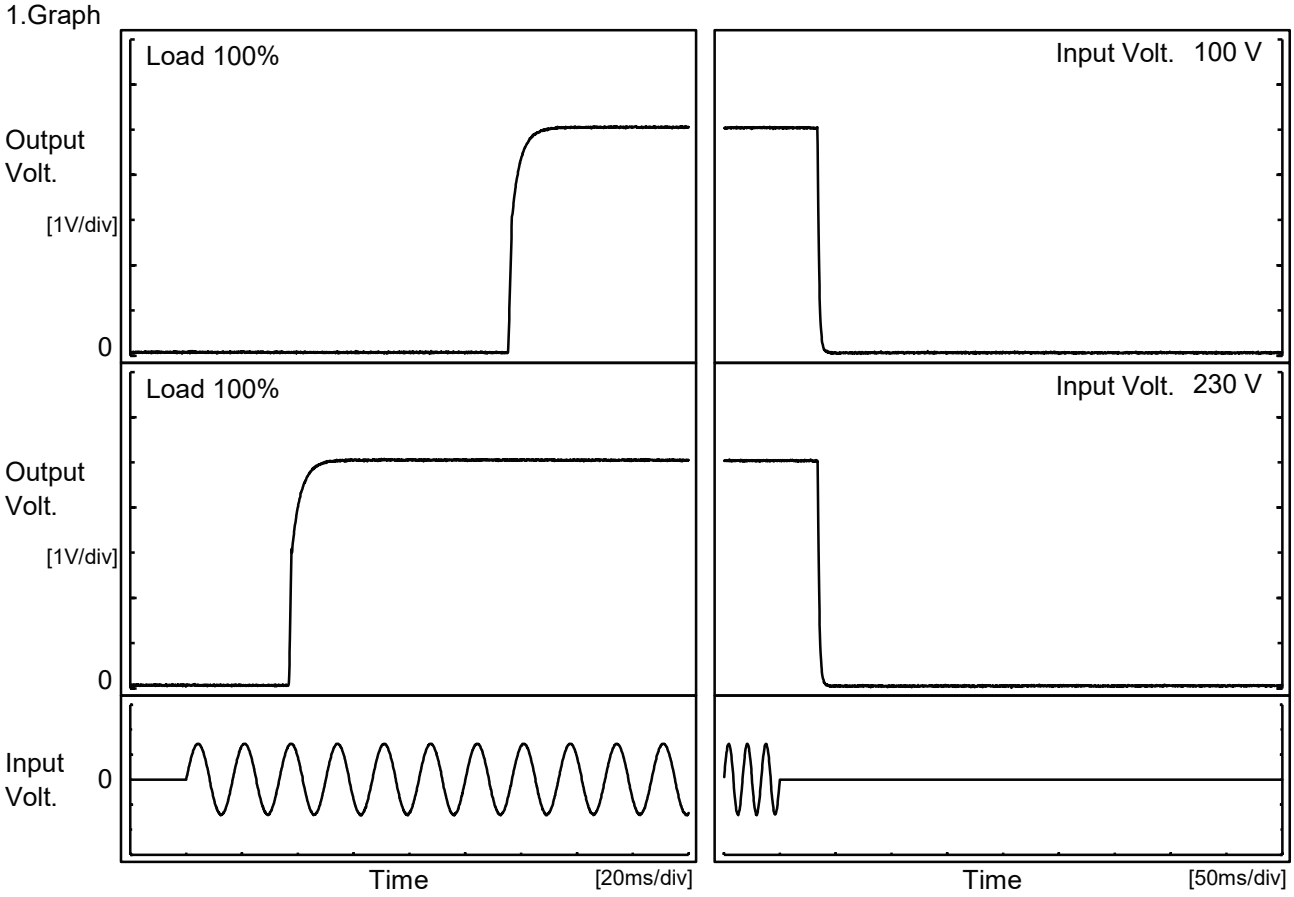

2.Values

[ms]

Input Volt. \ Time	Td	Tr	Ts	Th	Tf
100 V	115.6	5.4	121.0	34.0	3.0
230 V	37.1	5.3	42.4	34.0	3.0

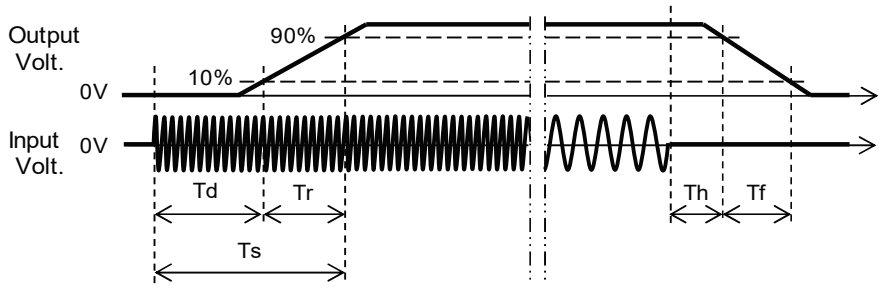

BC-12272

COSEL

Model	PDA75F-5
Item	Hold-Up Time
Object	+5V15A

Temperature 25°C
Testing Circuitry Figure A

1.Graph

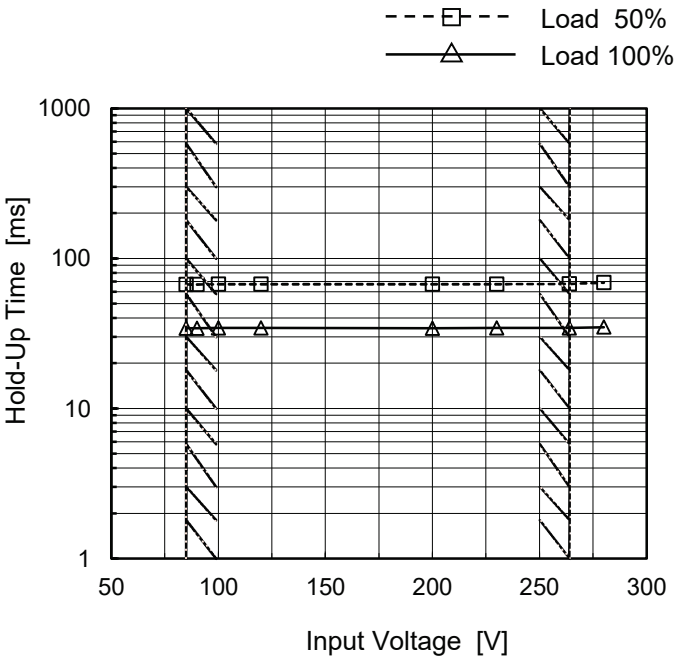

This duration covers from Shut-off of input voltage to the moment when output voltage descends to the rated range of voltage accuracy.
Note: Slanted line shows the range of the rated input voltage.

2.Values

Input Voltage [V]	Hold-Up Time [ms]	
	Load 50%	Load 100%
85	67	34
90	67	34
100	67	34
120	67	34
200	67	34
230	68	34
264	68	34
280	69	35
--	-	-

COSEL

Model	PDA75F-5
Item	Instantaneous Interruption Compensation
Object	+5V15A

Temperature 25°C
Testing Circuitry Figure A

1.Graph

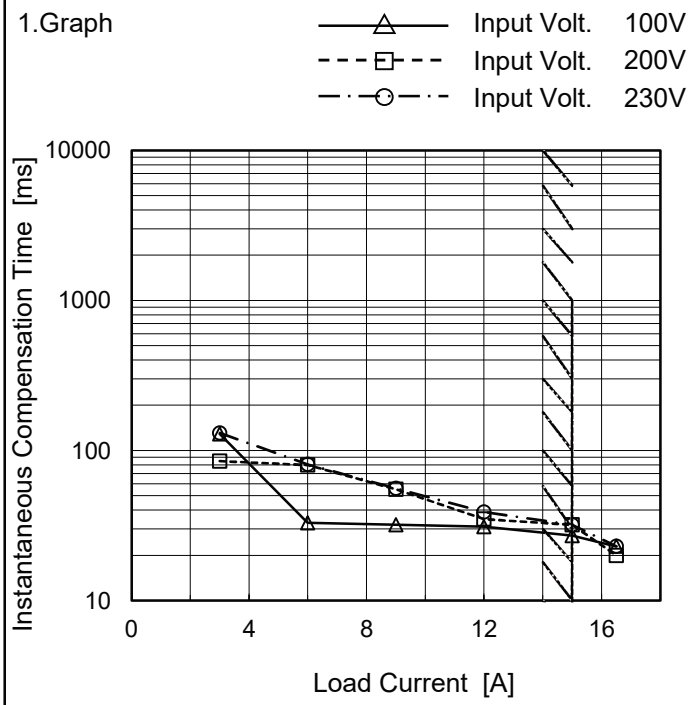

Note: Slanted line shows the range of the rated load current.

2.Values

Load Current [A]	Time [ms]		
	Input Volt. 100[V]	Input Volt. 200[V]	Input Volt. 230[V]
0.0	-	-	-
3.0	129	85	131
6.0	33	80	81
9.0	32	55	56
12.0	31	35	39
15.0	27	32	32
16.5	23	20	23
--	-	-	-
--	-	-	-
--	-	-	-
--	-	-	-

COSEL

Model	PDA75F-5
Item	Overcurrent Protection
Object	+5V15A

Temperature 25°C
Testing Circuitry Figure A

1.Graph

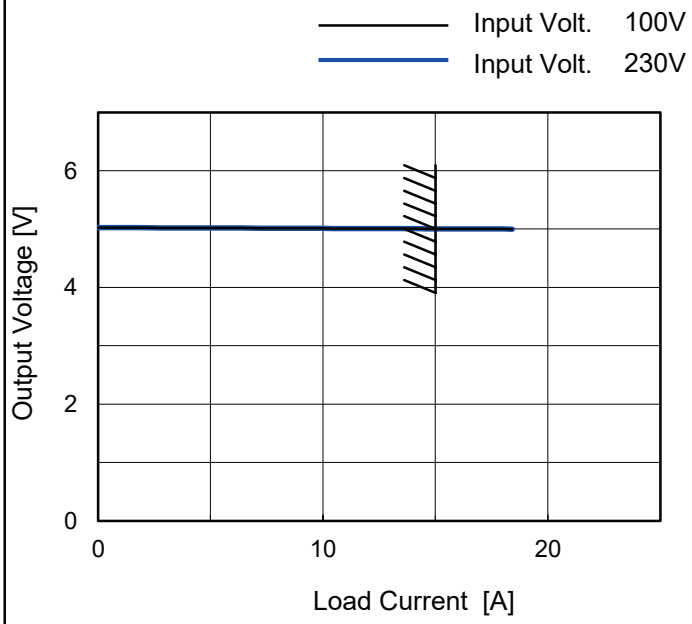

Note: Slanted line shows the range of the rated load current.

Overcurrent protection is Hiccup mode.

2.Values

Output Voltage [V]	Load Current [A]	
	Input Volt. 100[V]	Input Volt. 230[V]
5.00	18.42	18.42
4.75	-	-
4.50	-	-
4.00	-	-
3.50	-	-
3.00	-	-
2.50	-	-
2.00	-	-
1.50	-	-
1.00	-	-
0.50	-	-
0.00	-	-

COSEL

Model	PDA75F-5	
Item	Ambient Temperature Drift	Testing Circuitry Figure A
Object	+5V15A	

1.Values

Load 100%

Ambient Temperature[℃]	Output Voltage [V]		
	Input Volt. 100V	Input Volt. 200V	Input Volt. 230V
-20	5.005	5.005	5.005
25	5.004	5.004	5.004
50	5.005	5.005	5.005

Item	Minimum Input Voltage for Regulated Output Voltage	Testing Circuitry Figure A
Object	+5V15A	

1.Values

Ambient Temperature[℃]	Input Voltage [V]	
	Load 50%	Load 100%
-20	41	44
25	41	44
50	41	54

Item	Overvoltage Protection	Testing Circuitry Figure A
Object	+5V15A	

1.Values

Load 0%

Ambient Temperature[℃]	Operating Point [V]	
	Input Volt. 100V	Input Volt. 230V
-20	6.69	6.57
25	6.57	6.57
50	6.57	6.57

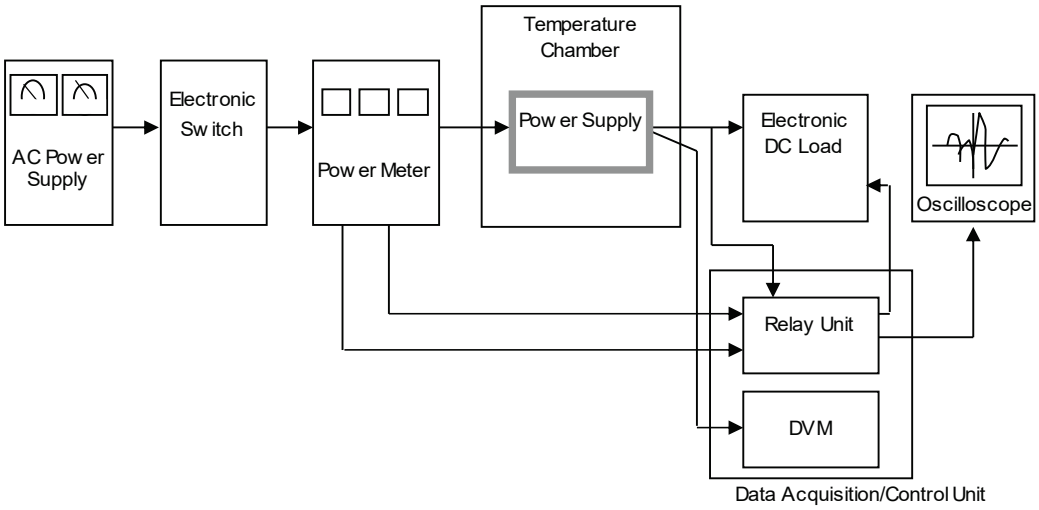

Figure A

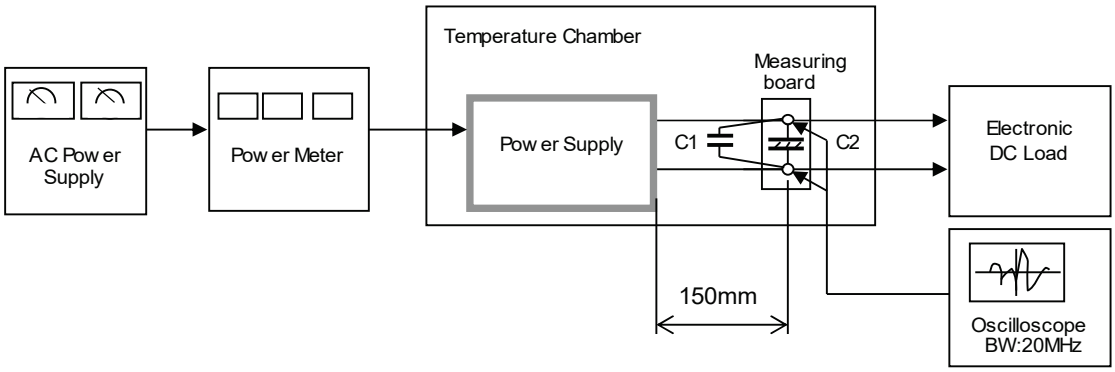

C1= 0.1 μF
(Ceramic capacitor)

C2= 22 μF
(Electrolytic capacitor)

Figure B

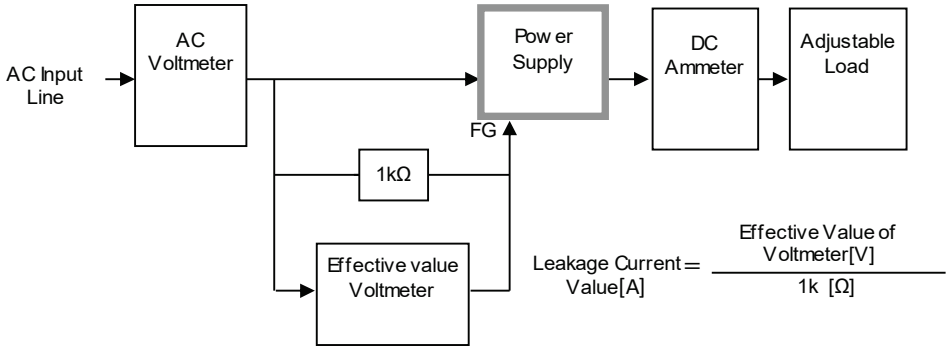

Figure C-1 (DEN-AN)

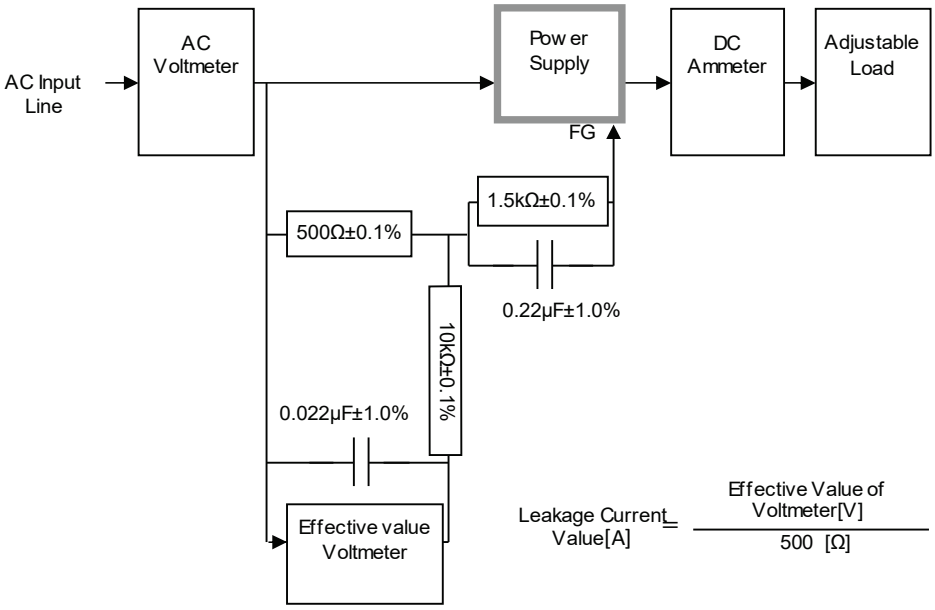

Figure C-2 (IEC62368-1 refer to IEC60990 Fig.4)

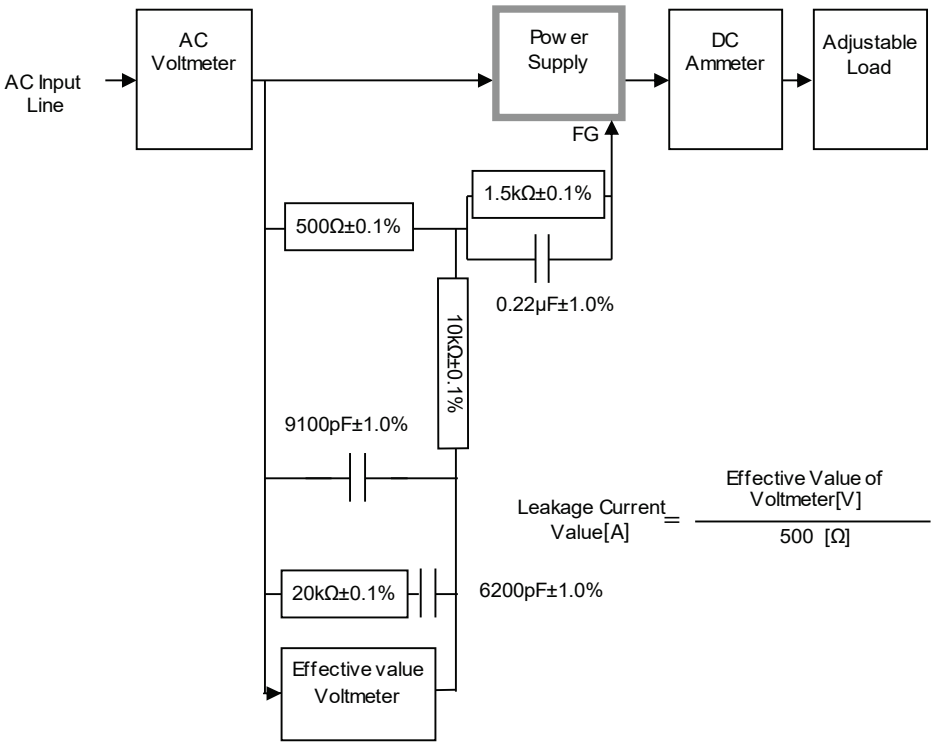

Figure C-3 (IEC62368-1 refer to IEC60990 Fig.5)